Maytag PAV2200AWW 03 - CONTROL PANEL

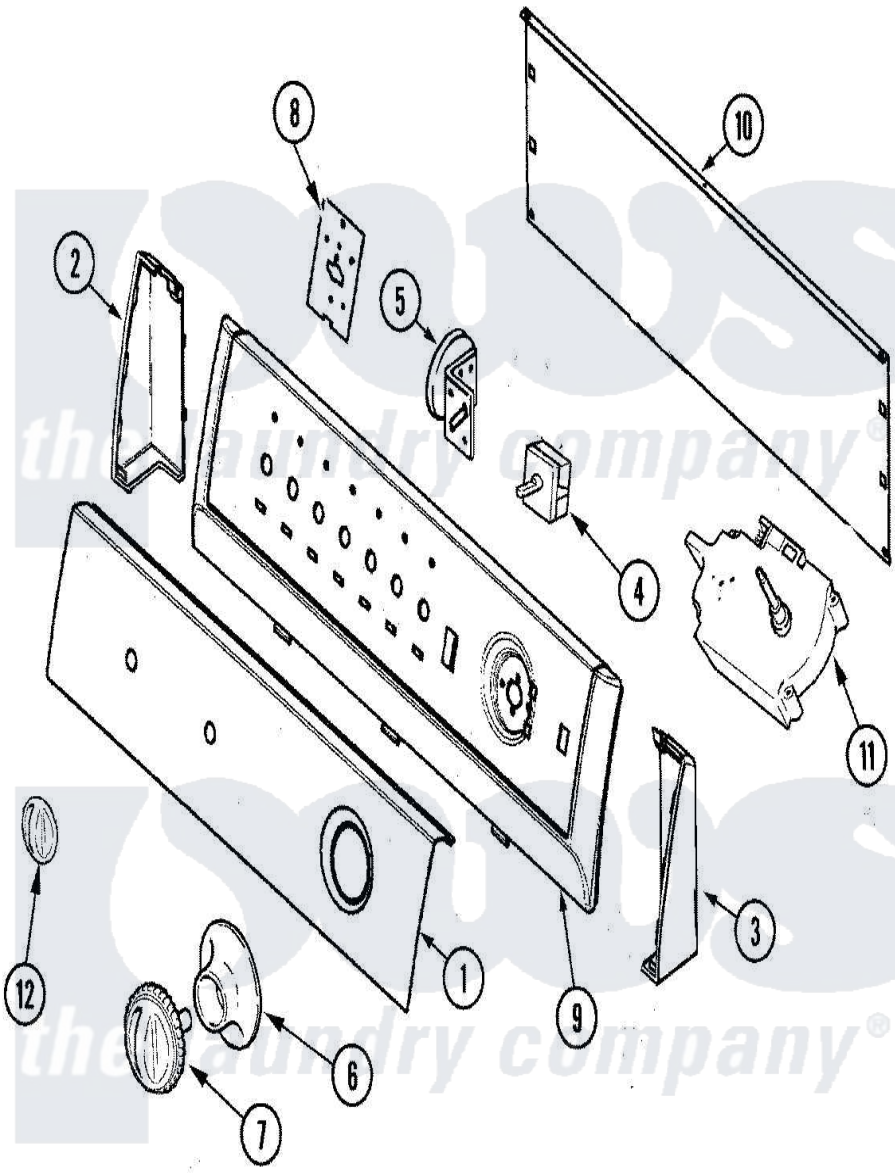

Maytag Residential Maytag PAV2200AWW Washer Parts Parts Diagram 03 - CONTROL PANEL
Click on the part number to view part

Item	Original Part Number	Replaced By	Status	Part Description
1	21001524			Panel, Control
2	21001519			Endcap
"	25-3092	90767		Screw, 8A X 3/8 HeX Washer Head Tapping
3	21001523			Endcap
"	25-3092	90767		Screw, 8A X 3/8 HeX Washer Head Tapping
4	21001226			Switch, Water Temp. 4 Position
"	25-3092	90767		Screw, 8A X 3/8 HeX Washer Head Tapping
5	21001554			Switch, Water Level
"	25-3092	90767		Screw, 8A X 3/8 HeX Washer Head Tapping
6	21001600			Skirt, Timer
7	21001594	21001972		Knob, Timer
8	31001193			Pad, Shield
"	53-2504	31001193		Pad, Shield

"	21001517			Shield, Control
9	21001604		Not Available	FRAME, CONTROL PANEL (WHT)
10	25-3092	90767		Screw, 8A X 3/8 HeX Washer Head Tapping
"	21001527			Shield, Rear
"	25-3457			Screw, Sems
11	25-3092	90767		Screw, 8A X 3/8 HeX Washer Head Tapping
"	21001522			Timer
12	21001525	21002196		Knob-Selector
13	21001717	21001866		Manual, Use And Care
"	21001571	21001866		Manual, Use And Care
"	21001419		Not Available	MANUAL, LAUNDERING TIPS
15	12002417			Wire Kit

the laundry company®
the laundry company®
the laundry company®