Maytag PAV3100AWW 06 - TUB

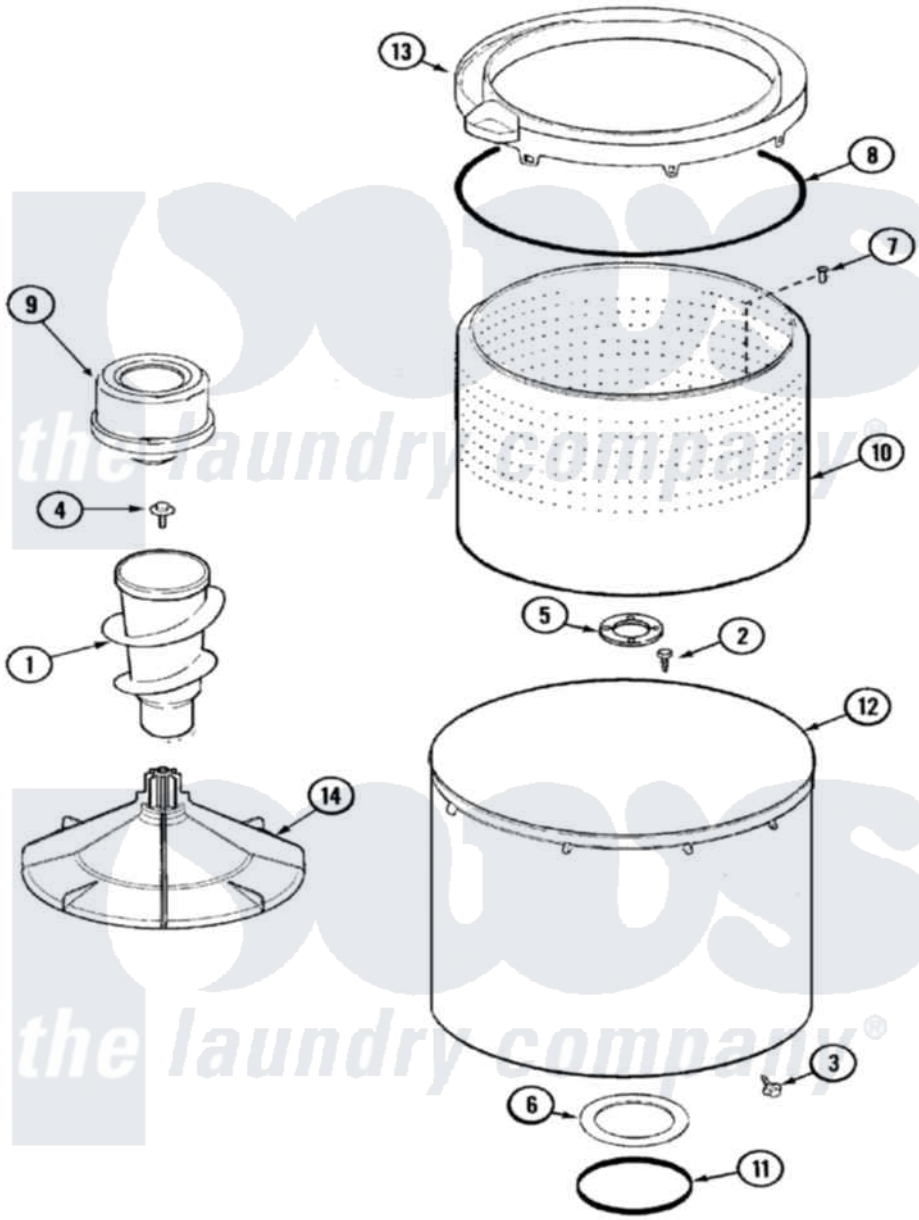

Maytag Residential Maytag PAV3100AWW Washer Parts Parts Diagram 06 - TUB
Click on the part number to view part

Item	Original Part Number	Replaced By	Status	Part Description
1	21001593	21001878		Auger/Post Assembly
2	21001510	22002947		Bolt, Tub
3	25-7953	22002933		Screw
4	25-7948	W10309247		Screw
5	35-3685			Gasket, Basket To Centerpost
6	35-3686			Gasket, Tub To Housing
7	25-7967	3400504		Screw
8	35-2328			Seal, Tub Top
9	21001905			Dispenser, Fabric
10	21001529			Basket Assembly
11	35-2978			Seal, Tub/Housing
12	35-3700			Tub Assembly
13	21001531		Not Available	TOP, TUB (PLASTIC)
14	21001530			Base, Agitator