Maytag PAV4960AWW 11 - WIRING INFORMATION

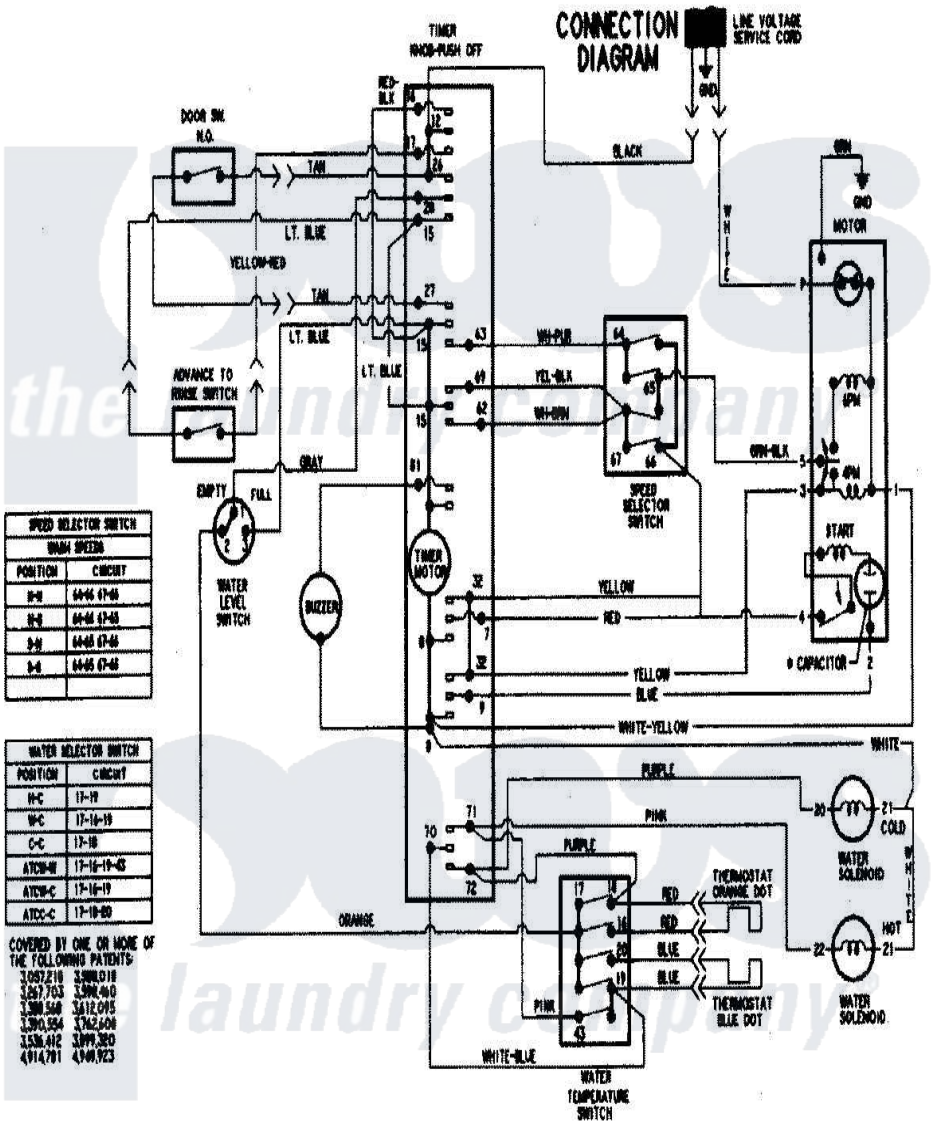

Maytag Residential Maytag PAV4960AWW Washer Parts Parts Diagram 11 - WIRING INFORMATION
Click on the part number to view part

Item	Original Part Number	Replaced By	Status	Part Description
NI	15002974		Not Available	WIRING INFORMATION