Maytag PAVT344AWW 05 - TOP

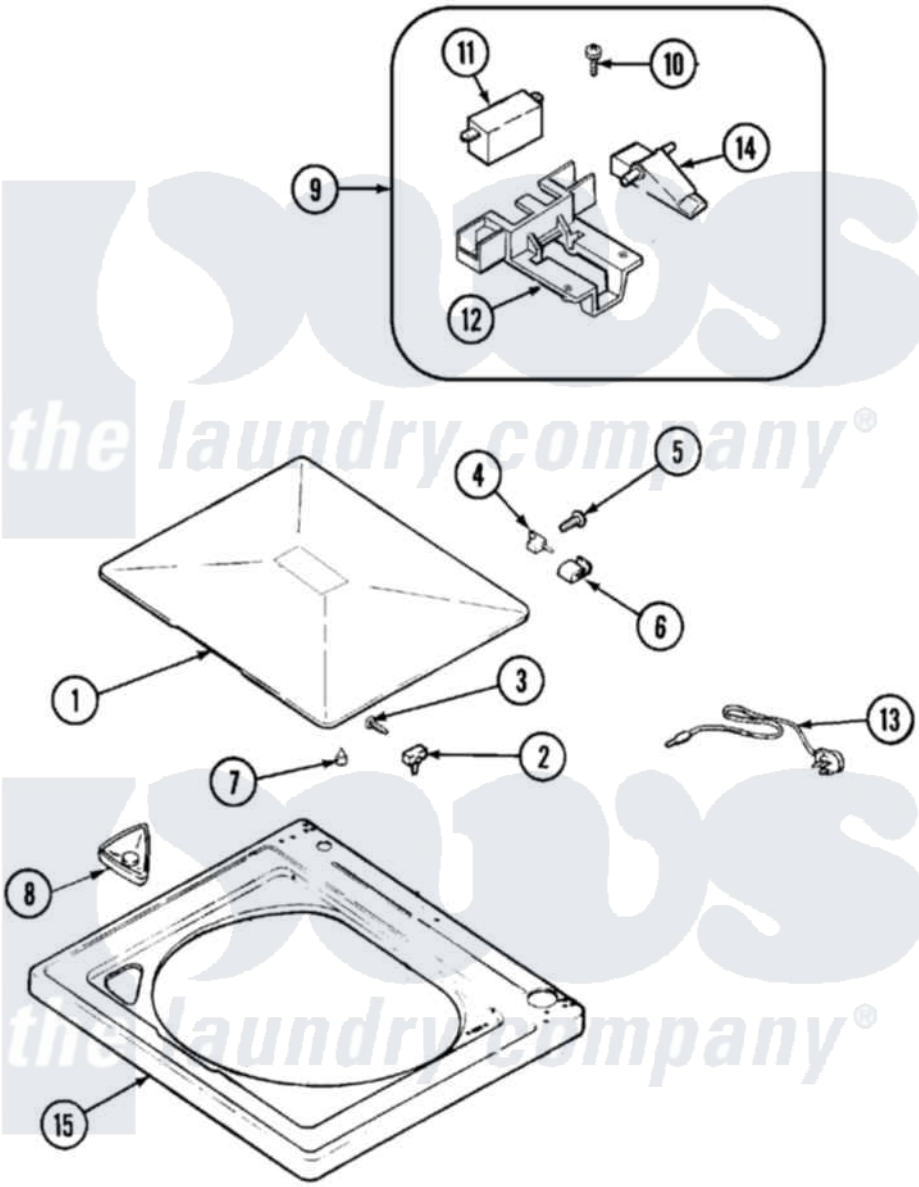

Maytag Residential Maytag PAVT344AWW Washer Parts Parts Diagram 05 - TOP
Click on the part number to view part

Item	Original Part Number	Replaced By	Status	Part Description
1	35-2026			Lid
2	43-0057			Actuator, Door Switch
3	25-7438			Screw
4	35-2045			Pin, Hinge
5	25-7893			Screw
6	35-2044			Hinge, Lid
7	35-0581			Bumper, Door
8	21001597			Dispenser, Bleach
9	21001137	12001187		Kit, Lid Switch Assembly
10	21001136	3400872		Screw, 8-18 X 3/8
11	21001148	12001187		Kit, Lid Switch Assembly
12	21001135			Housing, Lid Switch
13	21001592			Cord, Power
14	21001134			Lever, Lid Switch
15	21001602			Top, Cabinet