Maytag SG7800 05 - CABINET, TOP COVER & WATER VALVE (REAR)

SECTION: CABINET, TOP COVER & WATER VALVE-REAR VIEW
MODEL: SE7800 SG7800

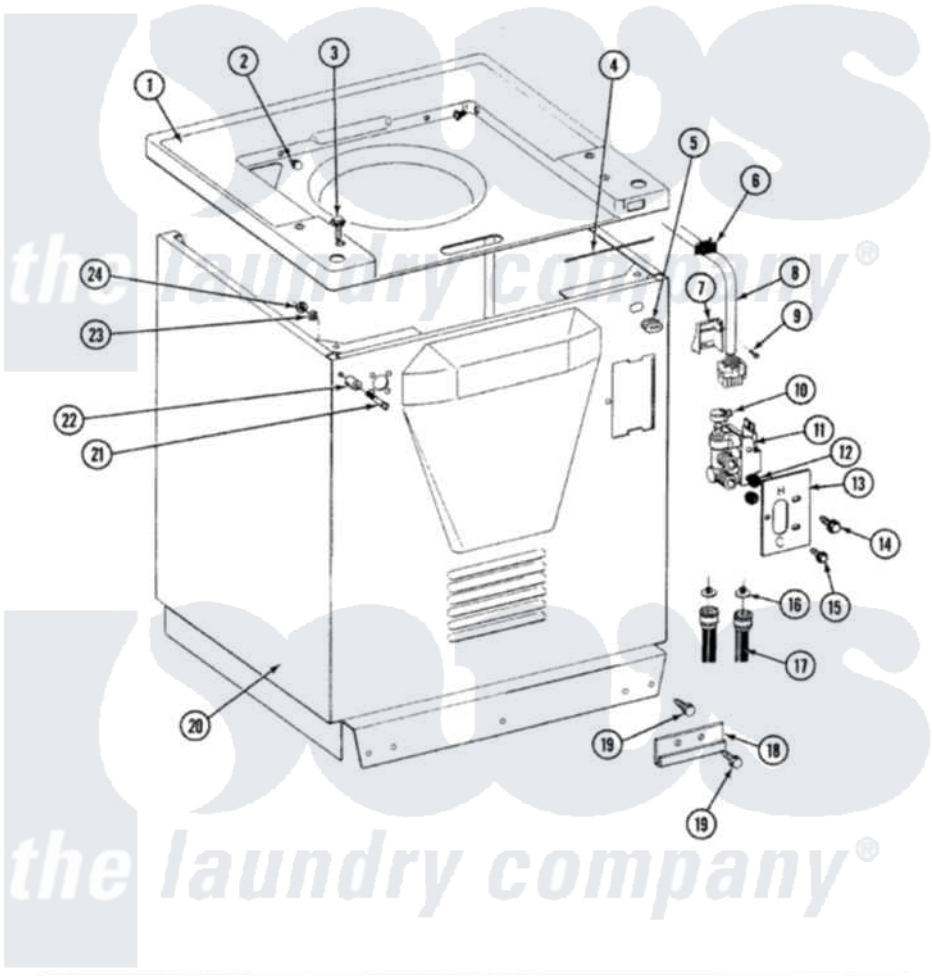

Issue Date: 12/90

Maytag Residential Maytag SG7800 Stacked Washer and Dryer Parts Parts Diagram 05 - CABINET, TOP COVER & WATER VALVE (REAR)
Click on the part number to view part

Item	Original Part Number	Replaced By	Status	Part Description
1	207579		Not Available	TOP COVER (WHITE)
2	215247		Not Available	BUMPER FOR LID
3	22001402	214354		Screw, Top Cover To Cabnt.
4	215274		Not Available	TOP COVER RESTRAINT
5	215950			(UPPER CABINET)
6	215948		Not Available	GROMMET
7	Y216003			Stain Relief W/Extension
"	215960		Not Available	STRAIN RELIEF
8	207784		Not Available	WIRE HARNESS
9	215953		Not Available	SCREW
10	201575			Clamp, Hose
11	205613			Water Valve
12	214337	96160		Screen
13	215264	22002371		Bracket
14	Y313561			Screw----NA
15	212276	W10116760		Screw

16	200961	12001413		Strainer And Washer Kit
17	200672	76314		Hose, Inlet 6 Ft. Hose With Elbow
18	215278		Not Available	GLIDE FOR WASHER
19	213121	3400111		Screw, 12-14 X 5/8
20	207207		Not Available	CABINET WHT
21	215277	67006908		Screw, Ice Rack
22	215276	Y215513		Standoff, Circuit Board
23	310557			Washer
24	Y052659	Y052655		Hex Nut, No.8-32

the laundry company®
the laundry company®
the laundry company®