Maytag YMED6000XW0 02 - CABINET PARTS

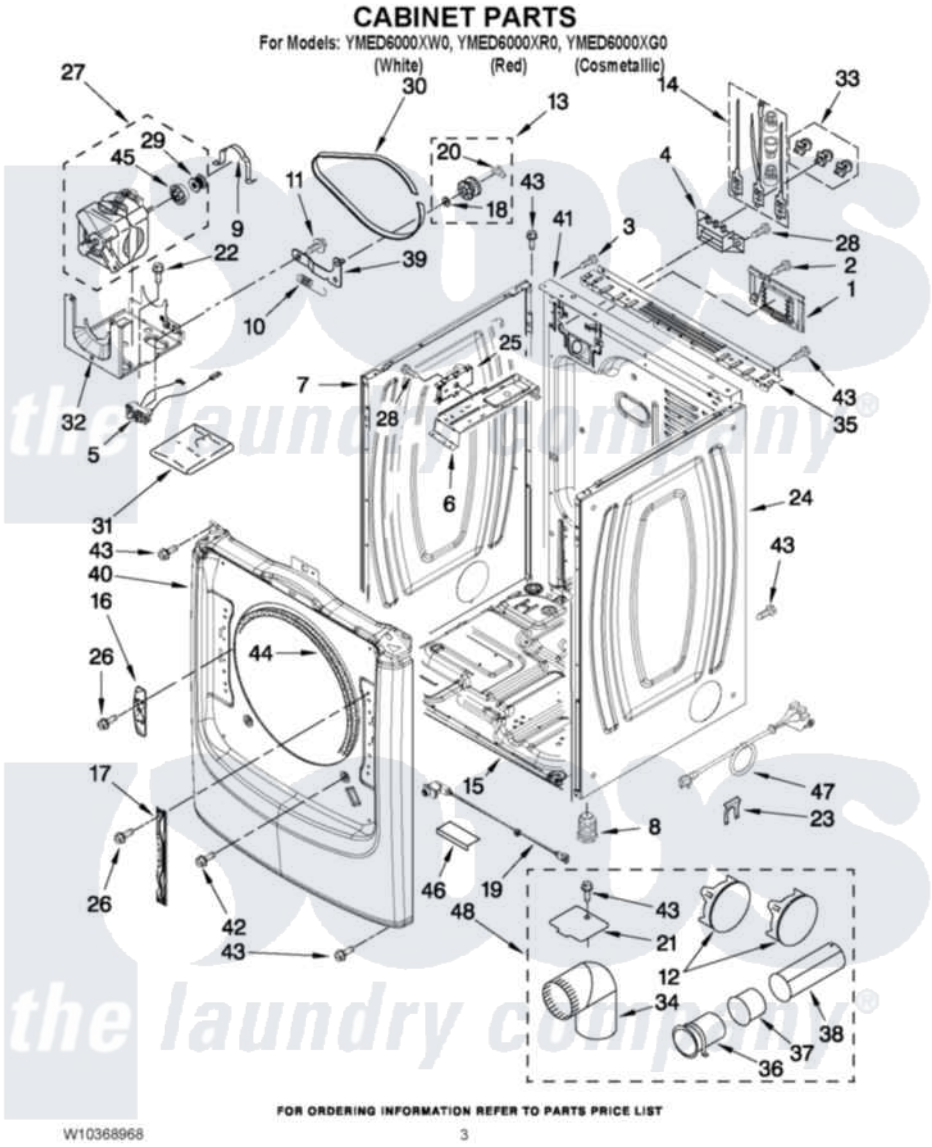

Maytag Residential Maytag YMED6000XW0 Dryer Parts Parts Diagram 02 - CABINET PARTS
Click on the part number to view part

Item	Original Part Number	Replaced By	Status	Part Description
1	W10316167			Cover,
2	3390814	90767		Screw, 8A X 3/8 HeX Washer Head Tapping
3	8533974	4331106		Screw, No.10-32 X 7/16
4	3397659			Block, Terminal
5	W10246525	W10314253		Switch, Assembly Broken Belt
6	W10259611			Bracket, Control
7	W10192435			Panel, Side
"	W10337789	W10468502		Panel, Side
"	W10301058			Panel, Side
8	3392100	49621		Feet-Leveling
NI	279810			Foot-Optional
9	660658			Clamp, Motor Mounting 343481 685441
10	3387374			Spring, Idler
11	3389420			Retainer-Idler 1/4-20 X 1/16
12	49252			Plug, Multivent

"	W10151499	W10404617	Plug, Multivent
13	3388672	279640	Pulley-Idr
14	279318		Terminal Tinned And Brass Panel
15	8565046		(BROKEN BELT BASE, CABINET SWITCH)
16	W10208250		Strike, Door
17	W10315109		Bracket, Door Hinge
18	W10121334		Washer, Thrust
19	W10295361		Assembly, Door Switch
20	690997		Washer, Thrust
21	8066115	3394331	Plate Cover
22	343641	681414	Screw, 10AB X 1/2
23	694415		Clip, Strain Relief
24	W10192446		Panel, Side
"	W10337791		Panel, Side
"	W10301059		Panel, Side
25	W10352731		Control Board
26	W10288126		Screw, 10-32 X 1/2
27	W10281085	W10396038	Motor Assembly 60 Hz
28	90767		Screw, 8A X 3/8 HeX Washer Head Tapping
29	3389729		Pulley, Motor
30	W10112954		Belt, Drive
31	W10298318RP		Paint, Bulk
32	W10242878		Bracket, Motor Mounting
33	279393		Terminal Block Screw Kit
34	49026		4" - 90° Elbow
35	W10208382		Bracket, Rear Dryer
36	8563747		Exhaust Pipe Medium Pipe
37	8563750		Exhaust Pipe
38	8563749		Exhaust Pipe
39	3388674	W10118756	Idler Bracket
40	W10294349		Panel, Front
"	W10337786		Panel, Front
"	W10301067		Panel, Front
41	W10247569		Panel, Rear
42	3357011	308685	Side Trim)
43	3390647	488729	Screw
44	3387242		Seal, Front Panel
45	3393657		Restrainer, Belt
46	W10215725		Cover, Door Switch
47	3394208		Cord, Power
NI	W10331132		Dryer Exhaust Kit

the laundry company®