Maytag YMED9700SB0 02 - CABINET PARTS

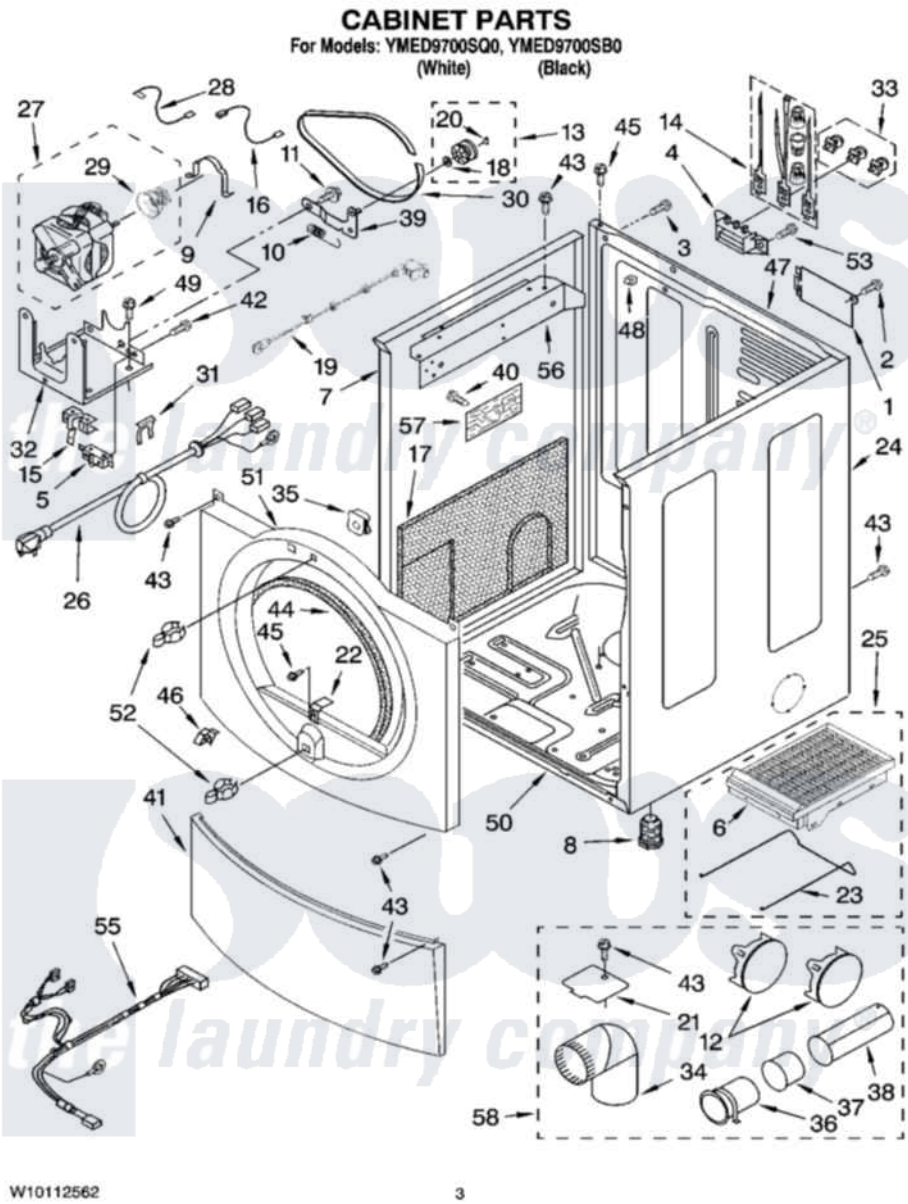

Maytag Residential Maytag YMED9700SB0 Dryer Parts Parts Diagram 02 - CABINET PARTS
Click on the part number to view part

Item	Original Part Number	Replaced By	Status	Part Description
1	8576583	W10119283		Cover, Terminal Block
2	3390814	90767		Screw, 8A X 3/8 HeX Washer Head Tapping
3	8533974	4331106		Screw, No.10-32 X 7/16
4	3397659			Block, Terminal
5	3394881	279782		Switch-Lid
6	8521959	W10121663		Dryer Rack
7	W10138989	W10117272		Panel
"	W10138996	W10117282		Panel
8	3392100	49621		Feet-Leveling
"	279810			Foot-Optional
9	660658			Clamp, Motor Mounting 343481 685441
10	3387374			Spring, Idler
11	3389420			Retainer-Idler 1/4-20 X 1/16
12	697750	W10470674		Dryer Exhaust Kit
"	8557570			Plug, Multivent

"	3388309	W10470674		Dryer Exhaust Kit
13	3388672	279640		Pulley-Idr
14	279318			Terminal Tinned And Brass Panel
15	8066120			Lever, Door Switch
16	W10167612			Wire, Broken Belt Switch
17	W10128772	8564134		Board, Sound Dampening
18	W10121334			Washer, Thrust
19	W10128087	W10318609		Switch, Assembly Door
20	690997			Washer, Thrust
21	8066115	3394331		Plate Cover
22	8529053			Ramp, Door Door Switch
23	8521961			Support, Dry Rack
24	W10139003	W10117273		Panel
"	W10139010	W10117283		Panel
25	8521957	W10121663		Dryer Rack
26	8529008		Not Available	HARNESS, WIRING
27	8538263	279787		Motor-Drve
28	3398948			Wire, Jumper
29	8578220			Pulley, Motor
30	3387610	661570		Belt
31	694415			Clip, Strain Relief
32	3387118			Bracket, Motor
33	279393			Terminal Block Screw Kit
34	49026			4" - 90° Elbow
35	62825			Clip-S Type Control Board
36	8563747			Exhaust Pipe Medium Pipe
37	8563750			Exhaust Pipe
38	8563749			Exhaust Pipe
39	3388674	W10118756		Idler Bracket
40	3400826			Screw, 8-18 X 3/4
41	W10116271	W10246269		Panel, Toe
"	W10116273			Toe Panel
42	98129			Screw, 6-20 X 1 1/16
43	3390647	488729		Screw
44	3387242			Seal, Front Panel
45	3393008	308685		Side Trim)
46	8519459			Clip, Toe Panel
47	W10133207	280036		Panel-Rear
48	692400			Nut, Push-In
49	343641	681414		Screw, 10AB X 1/2
50	8519207			Base, Cabinet
51	8565907	280101		Panel
"	8579974	W10165269		Panel
52	696144	279570		Latch
53	359625	487240		Screw, For Mtg. Service Capacitor
55	8299925			Harness, Digital Interface
56	8519273	W10119274		Bracket, Control
57	8546219			Control Board
"	BLANK		Not Available	OPTIONAL PARTS (NOT INCLUDED)
58	279818	W10470674		Dryer Exhaust Kit
"	280028	W10470674		Dryer Exhaust Kit

the laundry company®

"	279820	W10470674	Dryer Exhaust Kit