Maytag YMED9800TK0 03 - BULKHEAD PARTS

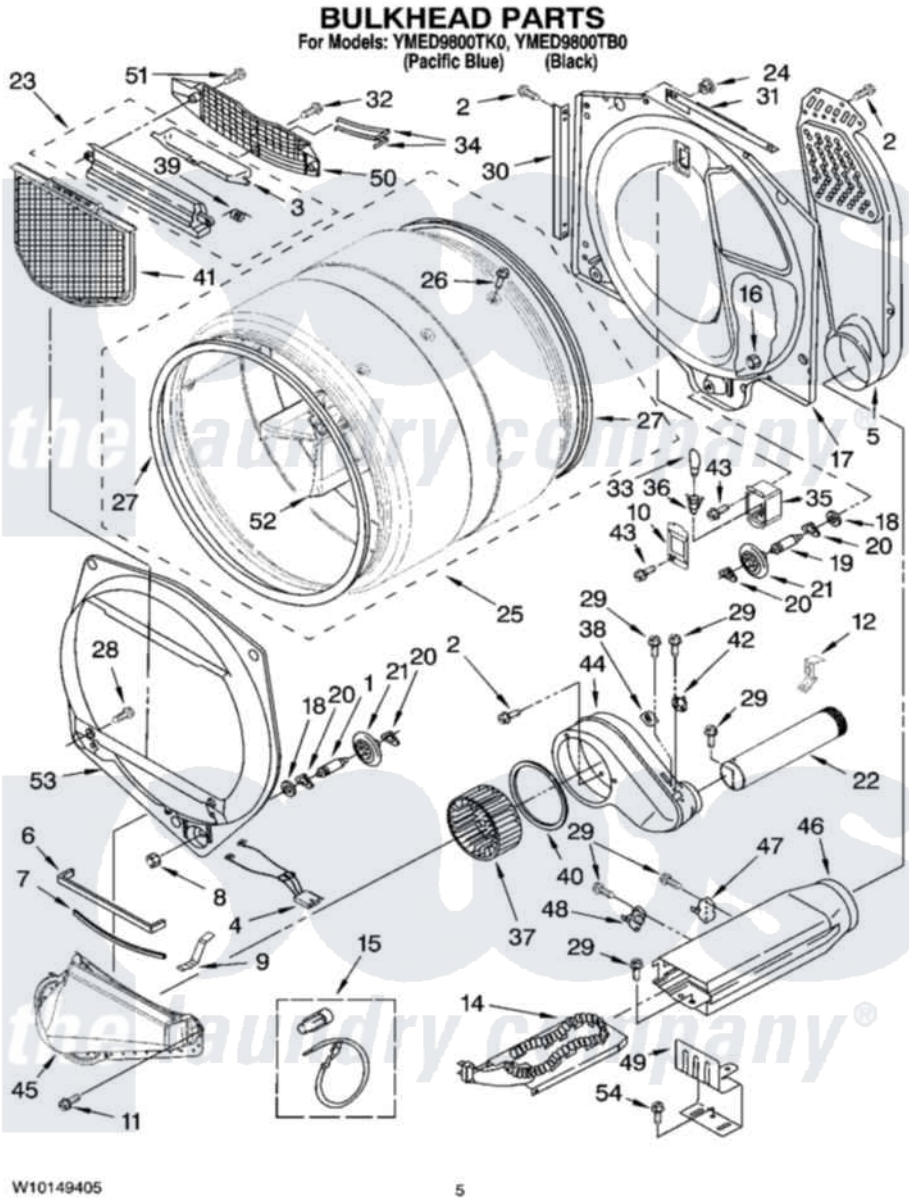

Maytag Residential Maytag YMED9800TK0 Dryer Parts Parts Diagram 03 - BULKHEAD PARTS
Click on the part number to view part

Item	Original Part Number	Replaced By	Status	Part Description
1	8575324	W10359271		Shaft, Drum Roller Threads
2	3390647	488729		Screw
3	3394984	8563758		Door, Lint Screen
4	3406653			Harness, Sensor
5	697354	3387911		Duct-Air
6	697813			Seal, Outlet Housing
7	697814	697813		Seal, Outlet Housing
8	3934666	W10080210		Nut, 3/8 X 16
9	8066208			Clip-Exhaust
10	3402841	8532165		Lens, Drum Light
11	489463			Screw, 8-18 X 1/16
12	8572105			Retainer, Toe Panel
14	3387747			Element, Heater
15	279457			Wire Kit, Terminal
16	W10001120	W10080190		Nut, 3/8-16
17	8520836			Bulkhead, Rear

18	3387459	W10080960	Washer, Support
19	8575325	W10359272	Shaft, Roller Drum Threads
20	690997		Washer, Thrust
21	8536973	W10314173	Support
22	8563745	279936	Kit-Exhst
23	3394985	8563755	Housing, Outlet Assembly
24	8529007		Plug, Rear Bulkhead
25	W10113138		Complete Drum Assembly
26	W10109200		Screw, Baffle Mounting
27	697694	280114	Seal
28	695240	488729	Screw
29	8533971	90767	Screw, 8A X 3/8 HeX Washer Head Tapping
30	8519221	W10118335	Channel Bracket, Rear Bulkhead
31	8571651	W10118337	Bracket-Bulkhead Upper Mounting
32	3357011	308685	Side Trim)
33	3406124	22002263	Lamp
34	3387223		Electrode, Sensor
35	3977373		Bracket, Drum Light
36	3403634	W10136369	Socket, Drum Light Assembly
37	697772		Wheel, Blower
38	3392519		Thermal Limiter
39	3394986		Spring, Lint Screen Door
40	697770		Seal, Cover Plate Blower Housing
41	W10049370	W10120998	Screen
42	8577274		Thermostat 295F
43	487909	488729	Screw
44	8544362	W10119255	Housing, Blower
45	8066168	W10128606	Duct-Lint
46	3392537		Box, Heater
47	8318314	279973	Kit, Thermal Cut-Off
48	3391914		Thermostat 295 F
49	8066099		Bracket, Heater Box
50	8299979		Grill, Outlet Screen Door
51	3387230		Screw, 10-16 X 13/16
52	W10113136		Baffle, Drum
53	8519245	W10136455	Bulkhead
54	90767		Screw, 8A X 3/8 HeX Washer Head Tapping

the laundry company®