Norge LWJ202W 01 - BASE & DRIVE (ORIG. REV. A)

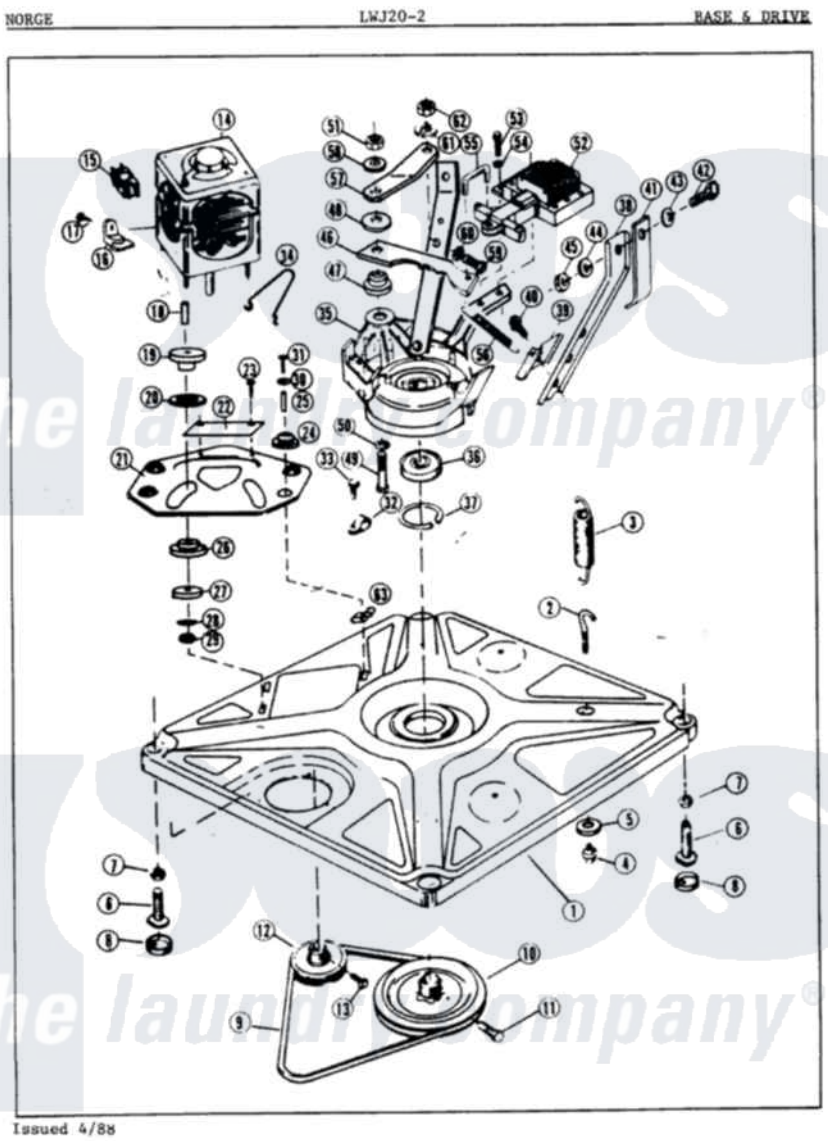

Norge Residential Norge LWJ202W Washer Parts Parts Diagram 01 - BASE & DRIVE (ORIG. REV. A)
Click on the part number to view part

Item	Original Part Number	Replaced By	Status	Part Description
1	35-0058			Base Assembly
2	25-7365			Eye Bolt
3	33-9553		Not Available	SPRING
4	25-7362			Anchor Nut
5	25-7727		Not Available	FLAT WASHER
6	35-0771			Leveling Leg
"	33-0679	35-0771		Leveling Leg
7	25-7032	25-7915		Hex Nut
8	34-0062	25001119		Foot And Pad Assembly
9	35-0465		Not Available	DRIVE BELT
10	33-9374		Not Available	DRIVE PULLEY
11	25-7361		Not Available	SET SCREW
12	33-9952		Not Available	MOTOR PULLEY
13	25-7117			Set Screw
14	LA-1010			Motor Kit
15	35-0259		Not Available	MOTOR SWITCH

"	33-9765			Switch, Motor
16	33-9945			Slide, Foot
17	25-7418	33001178		Back, Tumbler
18	25-7830			Spacer
19	33-9946			Isolator, Motor
20	33-9944	35-3570		Washer, Motor Pivot
21	33-9942			Motor Plate
22	33-9947		Not Available	DBL.PIVOT SLIDE
23	25-6121	212951		Screw, No.6-32 X 1/4 Inch
24	33-9941	35-3646		Isolator, Motor Plate
25	25-7831			Spacer, Mounting
26	33-9943	35-3571		Slide, Motor Pivot
27	33-9967			Washer, Motor Isolator
28	25-7047			Washer, Flat
29	25-0224	3400029		Nut, Adapter Plate
30	25-7834			Washer, Motor/Base Screw
31	25-7833	21001977		Screw
32	25-7265		Not Available	WIRING CLAMP
33	25-3106		Not Available	SCREW
34	35-0235			Spring, Motor Pivot
35	33-9579			Susp Housing
36	35-0763	21001840		Bearing
37	25-7850			Retaining Ring
38	33-9569			Tub Brace
39	33-9391		Not Available	BRACKET
40	25-7359			Screw
"	25-7674			Screw
41	33-6880			Bracket
42	25-7275		Not Available	SCREW
43	25-7413		Not Available	FLAT WASHER
44	25-7089		Not Available	LOCKWASHER
45	25-0048	Y052734		Nut, Carrage Bolts And Bracket
"	33-4287N		Not Available	BRAKE LATCH KIT
46	33-9576		Not Available	BRAKE LATCH
47	33-9966			Brk Ltch Bearng
48	33-0279		Not Available	WASHER
49	25-7790		Not Available	HEX HD BOLT
50	25-6118		Not Available	LOCKWASHER
51	25-7304			Locknut
52	35-0472		Not Available	BRAKE SOLENOID
53	25-7432		Not Available	SCREW
54	25-6117		Not Available	LOCKWASHER
55	33-9521		Not Available	BRAKE LINK
56	35-0590		Not Available	LATCH SPRING
57	33-9554		Not Available	SUPPORT BRACE
58	25-7549		Not Available	FLAT WASHER
59	25-7275		Not Available	SCREW
60	25-7413		Not Available	FLAT WASHER
61	25-7089		Not Available	LOCKWASHER
62	25-7798		Not Available	HEX NUT
63	25-7838	25-7845		Speednut, Motor