Norge LWM205W 03 - CONTROL PANEL (REV. A-E)

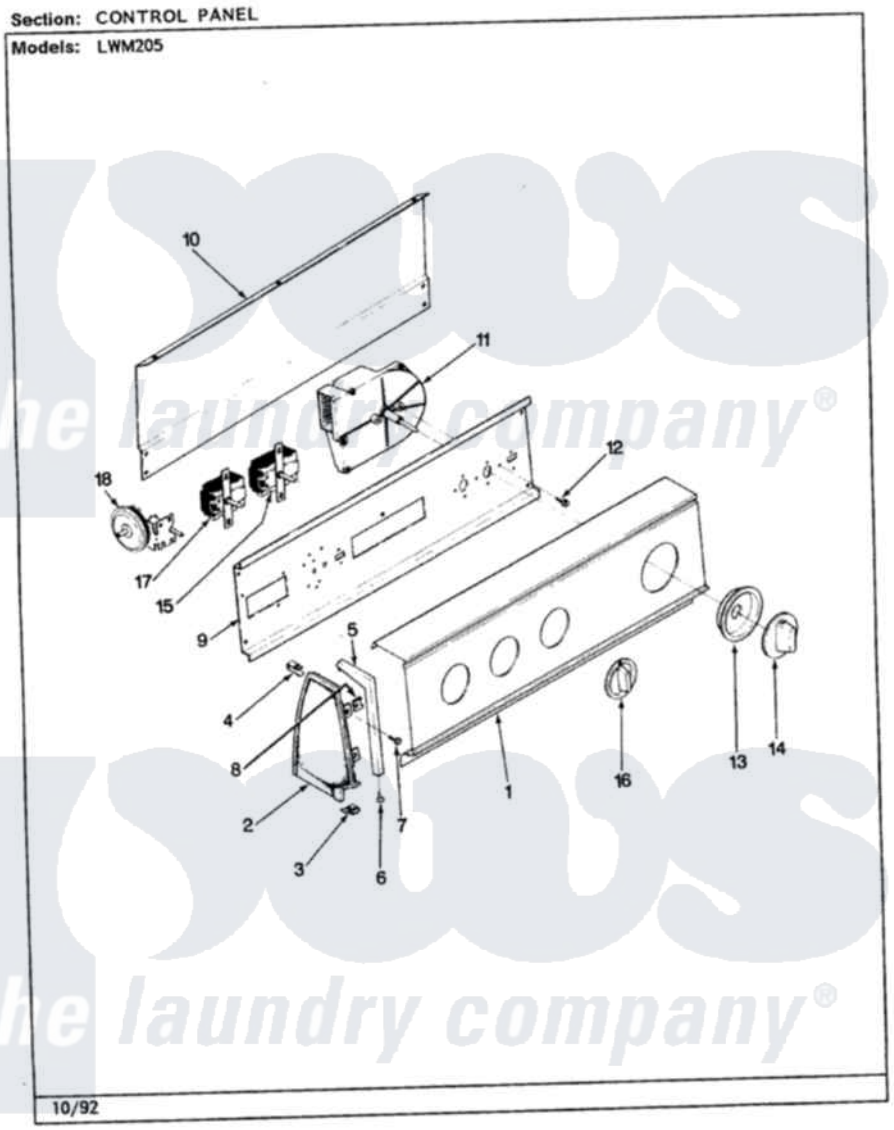

Norge Residential Norge LWM205W Washer Parts Parts Diagram 03 - CONTROL PANEL (REV. A-E)
Click on the part number to view part

Item	Original Part Number	Replaced By	Status	Part Description
1	35-2937		Not Available	CONTROL PANEL
"	25-7793			Screw
"	25-7702			Speedclip, End Cap To Control Panel
2	35-2669		Not Available	CAP, END (LT)(WHT)
"	35-2668	21001453		Cap- End
3	25-7697	25-2219		Screw
"	34-9487		Not Available	PLATE, REINFORCEMENT
"	25-7851			Speedclip, End Cap To Top
4	25-7435	33002917		Screw, No.10-16
"	25-7852			Speedclip, Rr Shld To End Cap
5	53-0277		Not Available	TRIM, END CAP (RT)
"	53-0278		Not Available	TRIM, END CAP (LT)
6	25-7760			Screw
7	25-3092	90767		Screw, 8A X 3/8 HeX Washer Head Tapping

8	25-7702			Speedclip, End Cap To Control Panel
9	53-1676			Shield, Control
10	25-3092	90767		Screw, 8A X 3/8 HeX Washer Head Tapping
"	25-3457			Screw, Sems
"	25-7853	25-7933		Ring, Retaining
"	35-2688	21001460		Shield, Rear
11	35-2845			Timer
12	25-0205	216412		Screw, Bracket To Timer
13	35-2950	21001502		Skirt Ri
14	35-2938	21001237		Knob, Timer
15	35-2838	35-2839		Switch
"	25-3092	90767		Screw, 8A X 3/8 HeX Washer Head Tapping
16	35-2940	21001239		Knob, Selector
17	25-3092	90767		Screw, 8A X 3/8 HeX Washer Head Tapping
"	35-2619		Not Available	SWITCH 4POS SPEED
18	35-2801	21001554		Switch, Water Level
"	35-2941		Not Available	MANUAL, USE & CARE
"	25-3092	90767		Screw, 8A X 3/8 HeX Washer Head Tapping
"	35-3283	21001554		Switch, Water Level