# Whirlpool 3RGSC9400SL1 04 - BRAKE, CLUTCH, GEARCASE, MOTOR AND PUMP PARTS

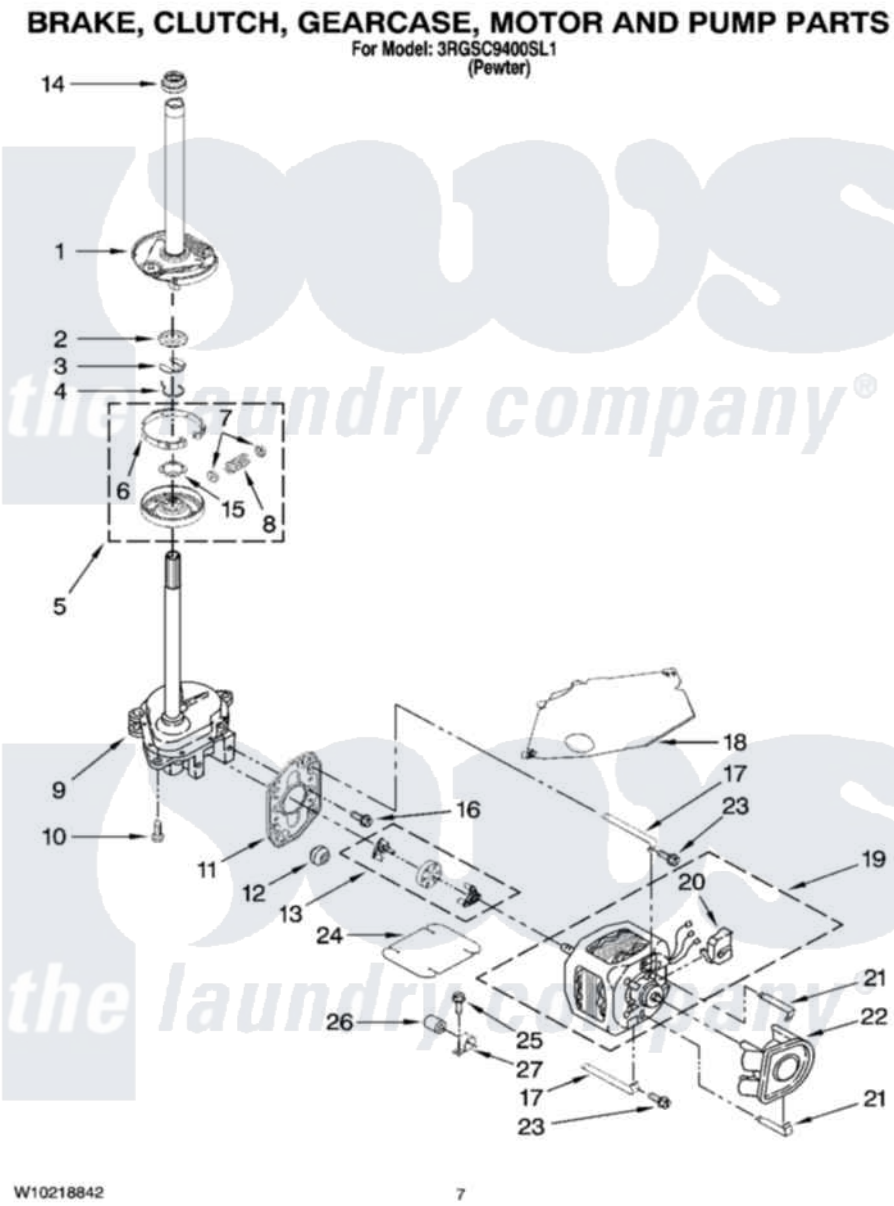


Whirlpool Residential Whirlpool 3RGSC9400SL1 Washer Parts Parts Diagram 04 - BRAKE, CLUTCH, GEARCASE, MOTOR AND PUMP PARTS
Click on the part number to view part

| Item | Original Part Number | Replaced By | Status | Part Description |
|---|---|---|---|---|
| 1 | W10117003 | | | Brake And Drive Tube |
| 2 | 63292 | | | Washer, Spin Tube Thrust |
| 3 | W10080230 | | | Ring, Spin Tube Support |
| 4 | 63283 | 285353 | | Ring |
| 5 | W10116968 | | | Clutch |
| 6 | W10118761 | | | Band And Lining, Clutch |
| 7 | 62646 | | | Cap, Clutch Spring |
| 8 | 3946792 | | | Spring And Damper Assembly |
| 9 | W10116916 | W10140308 | | Gearcase |
| 10 | W10080600 | W10080610 | | Screw |
| 11 | 62611 | | | Plate, Motor Mount To Gearcase |
| 12 | 62691 | | | Grommet, Motor |
| 13 | 3364003 | 285753A | | Coupling |
| 14 | 8577374 | | | Seal, Centerpost |

| | | | |
|---|---|---|---|
| 15 | 3355454 | | Clip, Main Drive |
| 16 | W10080610 | | Screw |
| 17 | W10086010 | | Retainer, Motor |
| 18 | 3362089 | | Shield, Tub To Motor |
| 19 | 3950297 | | Motor, Main Drive |
| 20 | 8529896 | | Switch, Main Drive Motor |
| 21 | 8546127 | | Retainer, Pump |
| 22 | 3363394 | | Pump |
| 23 | W10080650 | 273556 | Screw, 10-16 X 5/8 |
| 24 | 8316060 | | Shield, Tub To Motor |
| 25 | W10080260 | | Screw, 10-16 X 5/16 |
| 26 | 8572719 | 482156 | Capacitor |
| 27 | W10083210 | | Clamp, Capacitor |

the laundry company®
the laundry company®
the laundry company®