Whirlpool 3RLSQ8000JQ4 02 - CONTROLS AND REAR PANEL PARTS

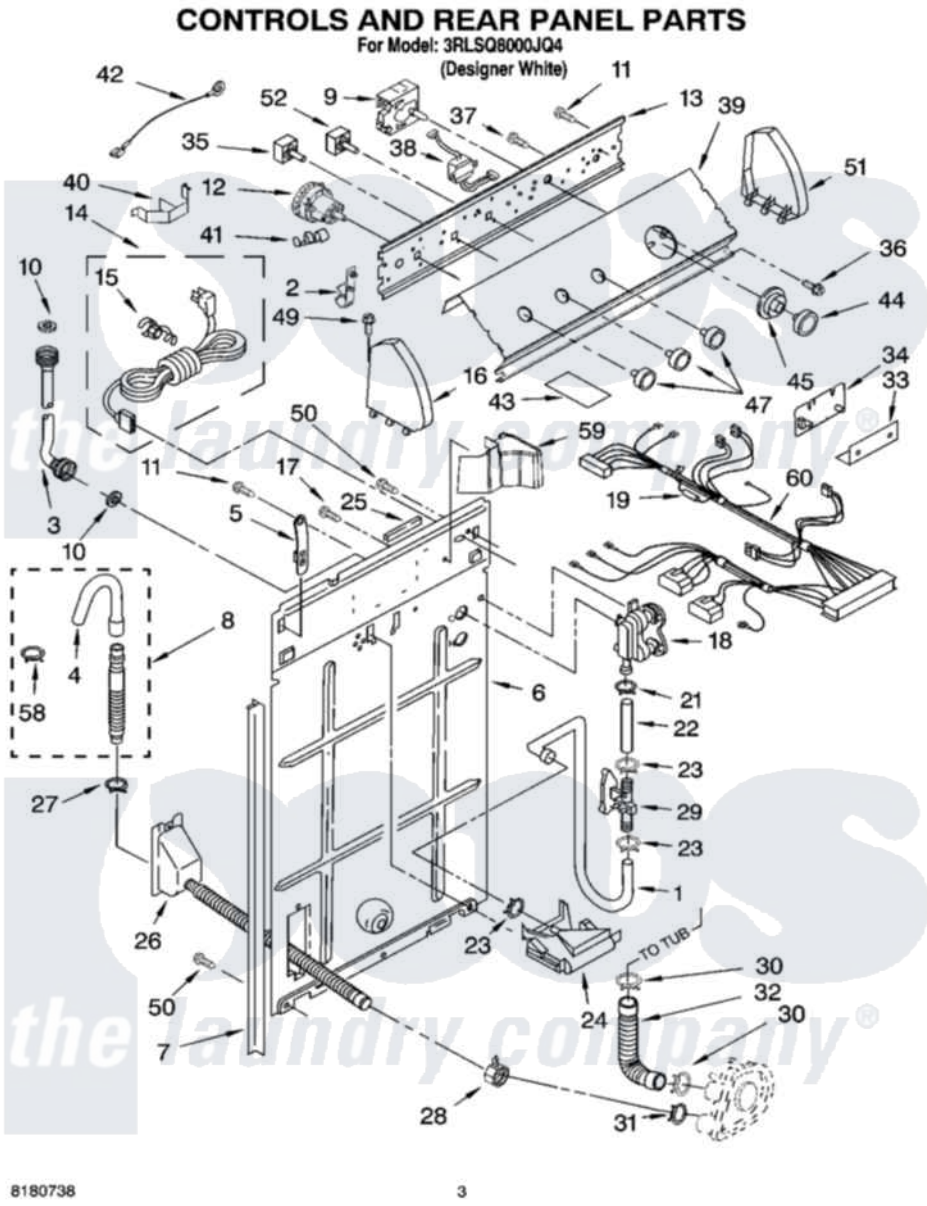

Whirlpool Residential Whirlpool 3RLSQ8000JQ4 Washer Parts Parts Diagram 02 - CONTROLS AND REAR PANEL PARTS

Click on the part number to view part

Item	Original Part Number	Replaced By	Status	Part Description
1	3349365			Hose, Sensor
2	8317975			Restraint, Harness
3	3949382			Hose, Water Inlet
"	3949383			Hose, Water Inlet
4	3357027			Nozzle, Hose Drain
5	8568314			Strap, Console
6	8318405			Panel, Rear
7	62747			Pad, Rear Panel
8	3951609	285664		Hose
"	661577	285666		Hose
"	3357090	285702		Hose
9	3954727	W10116251		Timer, Control
10	3976300	16123		Washer Inlet-Hose Miscellaneous Parts Must be Ordered Separately.
11	90767			Screw, 8A X 3/8 HeX Washer Head Tapping

12	3366848	W10339229	Switch-WL
13	3948608		Bracket, Control
14	8316047		Cord, Power
15	3949468	285777	Relief-Str
16	8271369	279962	Endcap
17	3351614		Screw, Gearcase Cover Mounting
18	3360397		Valve, Water Mixing
19	3951198		Fuse
21	370451	596669	Clamp, Manifold
22	3357319		Hose, Vacuum Break
23	371503	596669	Clamp, Manifold
24	387606	3360977	Break-Vac
25	303294	3367669	Protector, Edge
26	8317959	W10358151	Drain Hose Assembly
27	356138		Clamp, Hose
28	3976395		Restraint, Hose
29	3352282		Sensor-Etc-Inline
30	3363366	616099	Clamp
31	8317496	285655	Clamp, Hose
32	3951449	285871	Hose
33	8316039		Shield, Atc
34	3407159	W10110247	Control, Atc-Iec
35	3949187	W10168262	Switch, Rotary
36	3400818		Screw, Timer Mounting
37	3179795		Screw, Ground
38	3407160		Transformer
39	8318786		Panel, Console
40	8055003		Clip, Harness And Pressure Switch
41	357572	W10113937	Clip, Grounding
42	3398893	3395559	Wire
43	3950829	3976286	Shield, Capacitor
44	8271345	3957824	Knob, Timer
45	8271351	3957849	Dial, Timer
47	8271339	3957799	Knob, Control
49	388326		Screw, 8-18 X 1.25
50	62863	3390631	Screw, 10-16 X 3/8
51	8271363	279962	Endcap
52	8526791		Switch, Rotary
58	3366913	3357331	Clamp, Drain
59	8314879		Shield, Inlet Valve
60	3956868	W10111968	Harness, Wiring

the laundry company®