# Whirlpool 3XWGD5705SW3 03 - BULKHEAD PARTS

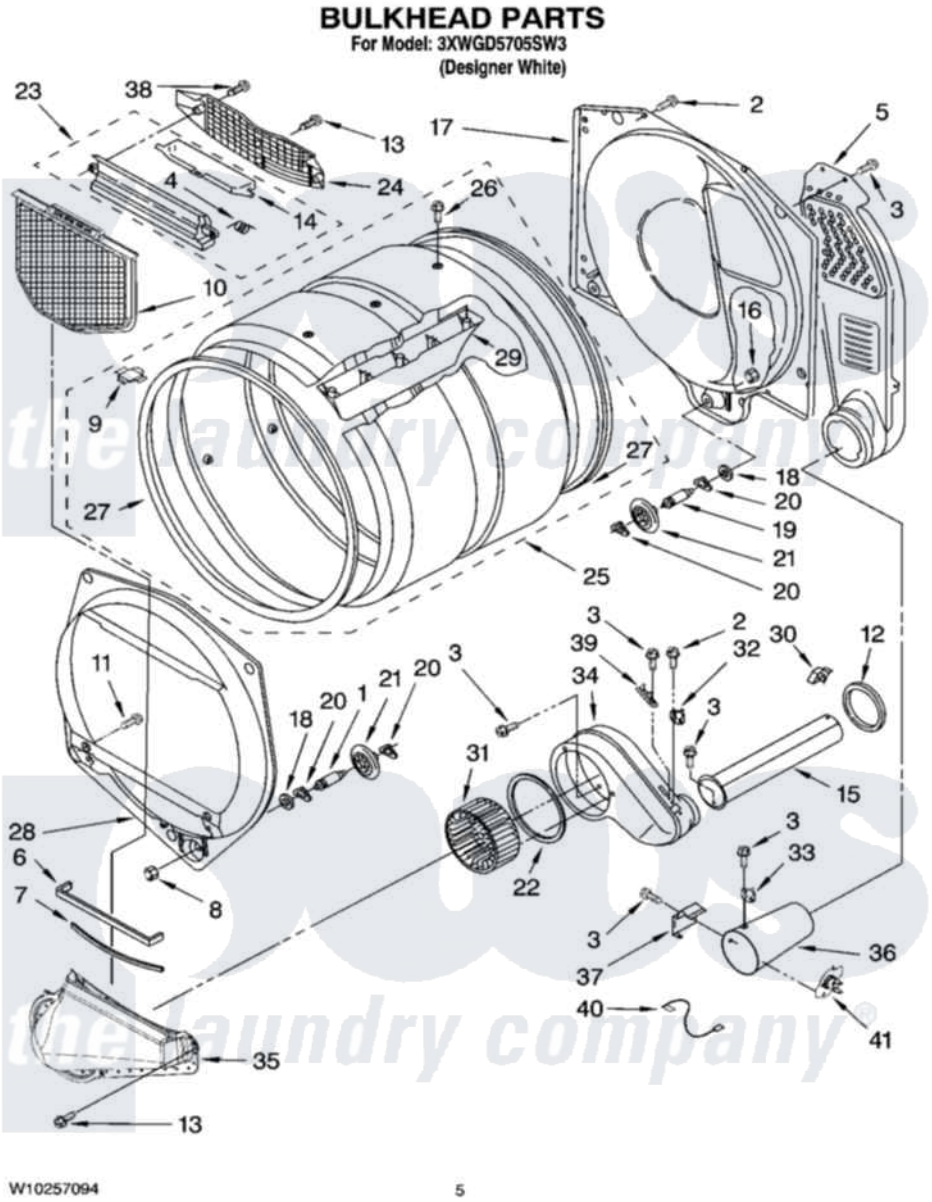


Whirlpool Residential Whirlpool 3XWGD5705SW3 Dryer Parts Parts Diagram 03 - BULKHEAD PARTS
Click on the part number to view part

| Item | Original Part Number | Replaced By | Status | Part Description |
|---|---|---|---|---|
| 1 | 8575324 | W10359271 | | Shaft, Drum Roller Threads |
| 2 | 3390647 | 488729 | | Screw |
| 3 | 90767 | | | Screw, 8A X 3/8 HeX Washer Head Tapping |
| 4 | 3394986 | | | Spring, Lint Screen Door |
| 5 | 3394346 | | | Air Duct Assembly |
| 6 | 697813 | | | Seal, Outlet Housing |
| 7 | 697814 | 697813 | | Seal, Outlet Housing |
| 8 | 3934666 | W10080210 | | Nut, 3/8 X 16 |
| 9 | 8066086 | | | Plug, Drum Hole |
| 10 | W10049370 | W10120998 | | Screen |
| 11 | 487909 | 488729 | | Screw |
| 12 | 696302 | | | Shield, Exhaust |
| 13 | 3387230 | | | Screw, 10-16 X 13/16 |
| 14 | 3394984 | 8563758 | | Door, Lint Screen |
| 15 | 8066224 | 279936 | | Kit-Exhst |
| 16 | W10001120 | W10080190 | | Nut, 3/8-16 |

| | | | |
|---|---|---|---|
| 17 | 3387809 | | Bulkhead, Rear |
| 18 | 3387459 | W10080960 | Washer, Support |
| 19 | 8575325 | W10359272 | Shaft, Roller Drum Threads |
| 20 | 690997 | | Washer, Thrust |
| 21 | 8536973 | W10314173 | Support |
| 22 | 697770 | | Seal, Cover Plate Blower Housing |
| 23 | 3394985 | 8563755 | Housing, Outlet Assembly |
| 24 | 8299979 | | Grill, Outlet Screen Door |
| 25 | 8528998 | | Complete Drum Assembly |
| 26 | W10219342 | | Screw, Baffle Mounting |
| 27 | W10166807 | 280114 | Seal |
| 28 | 697557 | | Bulkhead, Front |
| 29 | 697693 | W10113136 | Baffle, Drum |
| 30 | 8572105 | | Retainer, Toe Panel |
| 31 | W10168564 | W10349492 | Wheel, Blower |
| 32 | W10168174 | | Thermostat Internal Bias |
| 33 | 3403140 | | Thermostat, High-Limit 205F |
| 34 | 8544362 | W10119255 | Housing, Blower |
| 35 | 8066168 | W10128606 | Duct-Lint |
| 36 | 8573824 | | Funnel, Burner |
| 37 | 338906 | | Radiant, Sensor |
| 38 | 3357011 | 308685 | Side Trim ) |
| 39 | 3392519 | | Thermal Limiter |
| 40 | 3401707 | | Jumper, Tco-High Limit |
| 41 | W10181549 | | Thermal-Cutoff |

the laundry company®