Whirlpool 7MLGC9900PW0 02 - CABINET PARTS

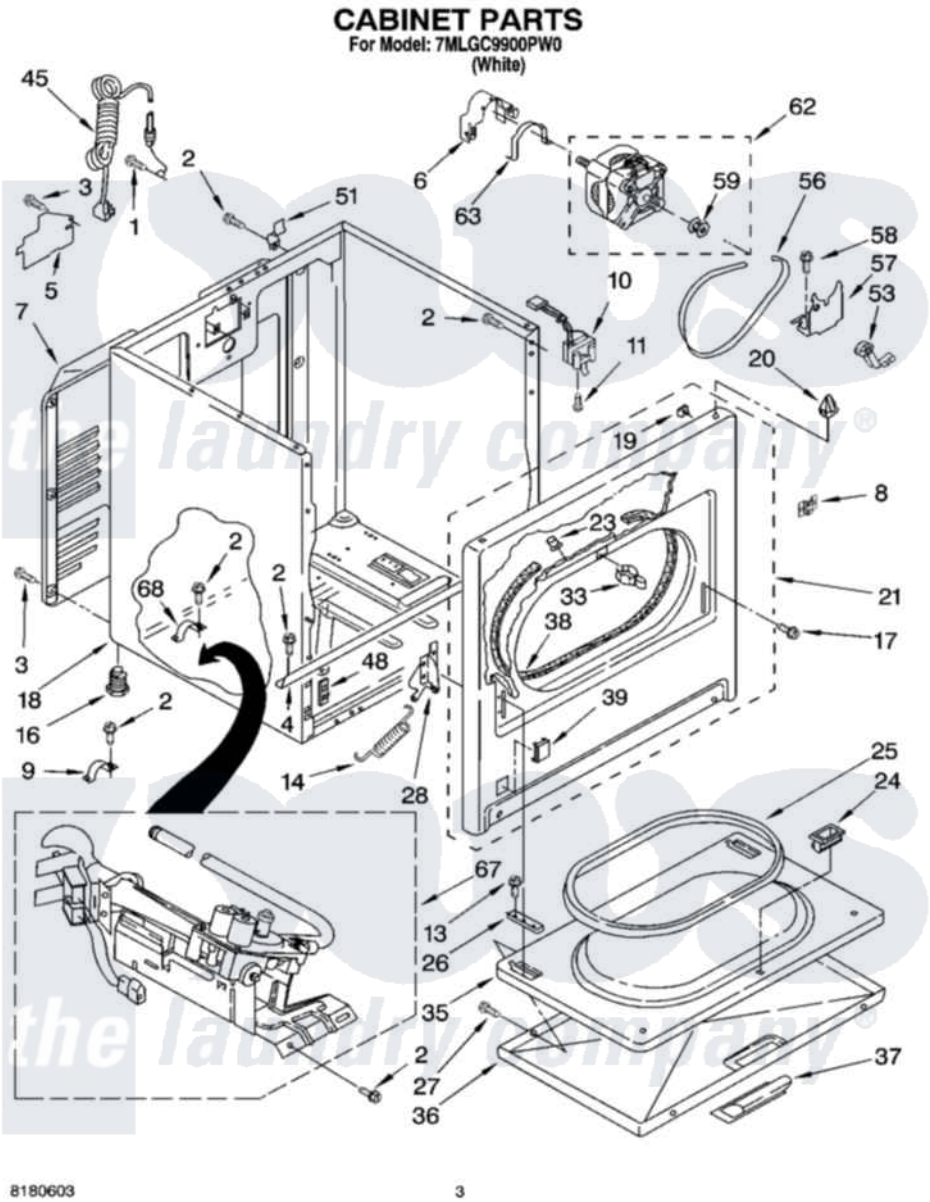

Whirlpool Residential Whirlpool 7MLGC9900PW0 Dryer Parts Parts Diagram 02 - CABINET PARTS
Click on the part number to view part

Item	Original Part Number	Replaced By	Status	Part Description
1	697776	4331106		Screw, No.10-32 X 7/16
2	343641	681414		Screw, 10AB X 1/2
3	693995			Screw, Hex Head
4	8541400			Bracket, Cabinet
5	3396795			Cover, Terminal Block
6	3404162			Clamp, Motor
7	3396805	280043		Panel-Rear
8	8546676	W10041960		Spring, Door
9	3980175			Clamp, Elbow
10	3406109	3406107		Door Switch Assembly
11	697773	3395530		Screw
13	3357011	308685		Side Trim)
14	8541401	W10041960		Spring, Door
16	3392100	49621		Feet-Leveling
"	279810			Foot-Optional
17	342043	486146		Screw

18	8530603	8533643	Cabinet
19	98234		Clip, U-Bend
20	690363	18776	Lock, Front Top
21	3395197	279740	Panel
23	685203	279220	Clip
24	3389441		Door Catch Assembly
25	3390731		Seal, Door
26	337189		Clip, Hinge
27	694091		Trim, Side Right Hand
28	8066056		Hinge, Door
"	8066057		Hinge, Door
33	696144	279570	Latch
35	695737		Door, Rear
36	3393549		Door, Front
37	690270	348721	Handle
38	3406129		Seal And Bearing Assembly
39	3394975		Plug, Front Panel
45	344020	3401402	Cord, Power
48	3394083		Clip, Front Panel
51	238088	8066217	Hinge, Top
53	691366		Idler And Pulley Assembly
56	8066065	341241	Belt
57	348780		Base, Motor
58	3400500		Bolt, 3405245 5/16-18 X 3/4
59	3394341	W10299847	Pulley-Motor
62	8538262	279827	Motor-Drve
63	660658		Clamp, Motor Mounting 343481 685441
67	8318272	W10465748	Burner-Gas
68	341029		Clamp, Pipe Door Spring

the laundry company®