Whirlpool 7MWC87660SM0 02 - CONTROLS AND REAR PANEL PARTS

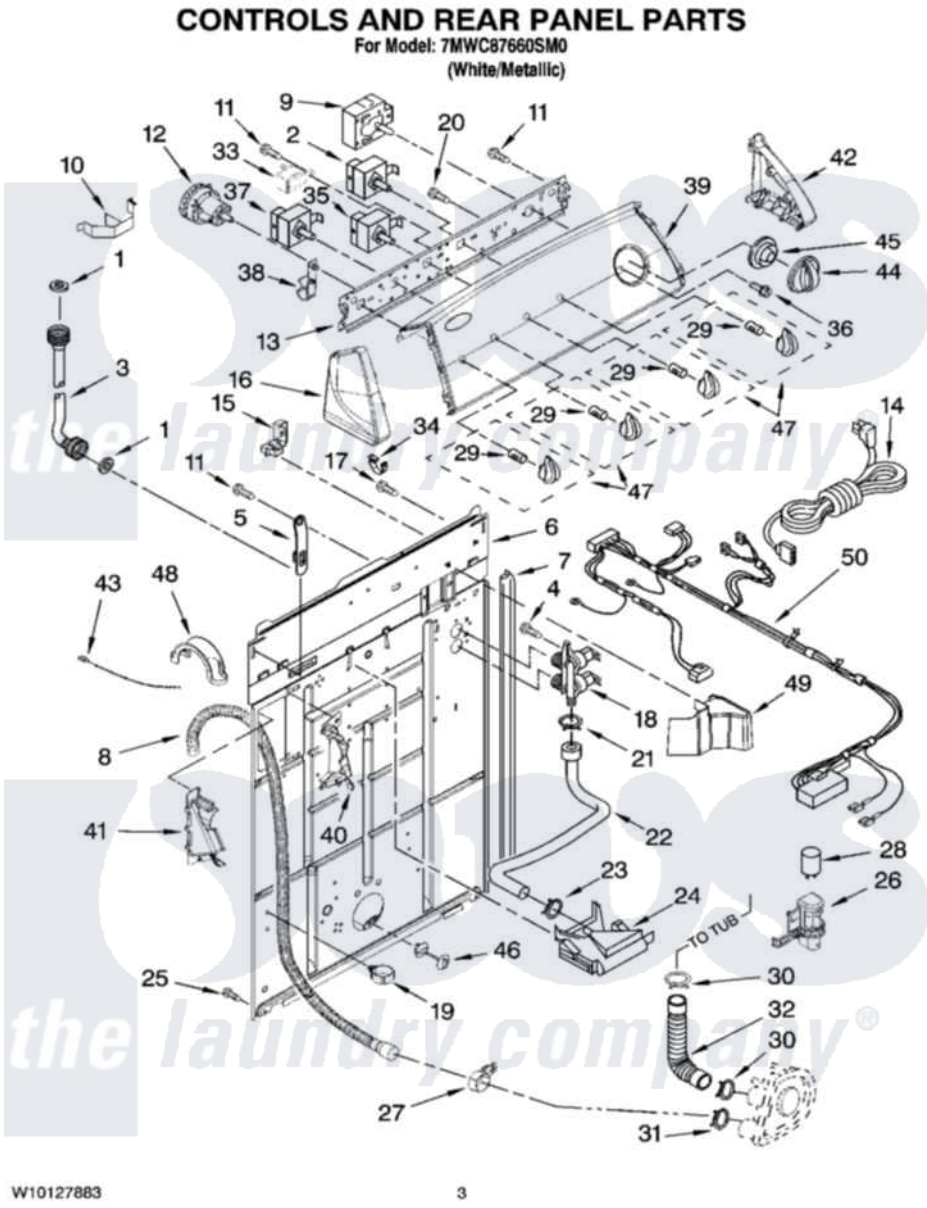

Whirlpool Residential Whirlpool 7MWC87660SM0 Washer Parts Parts Diagram 02 - CONTROLS AND REAR PANEL PARTS

Click on the part number to view part

Item	Original Part Number	Replaced By	Status	Part Description
1	3976300	16123		Washer Inlet-Hose Miscellaneous Parts Must be Ordered Separately.
2	3949187	W10168262		Switch, Rotary
3	8571377	89503		Hose-Inlet
"	8571378	89503		Hose-Inlet
4	9740848			Screw, Mixing Valve Mounting
5	8568314			Strap, Console
6	8318015			Panel, Rear
7	62747			Pad, Rear Panel
8	8559373	W10096921		Drain Hose Assembly
9	3951702			Timer, Control
10	8055003			Clip, Harness And Pressure Switch
11	90767			Screw, 8A X 3/8 HeX Washer Head Tapping
12	3366845	W10339326		Switch-WL

13	8566003			Bracket, Control
14	W10115689			Cord, Power
15	3952821	285777		Relief-Str
16	8565957			Cap, End
17	3351614			Screw, Gearcase Cover Mounting
18	3952164	285805		Valve-Inlet
19	8541667			Clamp, Hose
20	3400073			Screw, Ground
21	301958	596669		Clamp, Manifold
22	8541607	3357328		Hose, Vacuum Break
23	370450	596669		Clamp, Manifold
24	387606	3360977		Break-Vac
25	62863	3390631		Screw, 10-16 X 3/8
26	8318046			Clip, Capacitor
27	8541668			Clamp, Hose
28	8572717			Capacitor, Motor Start
29	8536939			Clip, Knob
30	3363366	616099		Clamp
31	8317496	285655		Clamp, Hose
32	3951449	285871		Hose
33	694419			Mini-Buzzer
34	8312709			Clip-Console
35	3949180	W10168257		Switch, Rotary
36	3400818			Screw, Timer Mounting
37	3950347			Switch, Water Temperature
38	8317975			Restraint, Harness
39	W10096795		Not Available	Panel, Console
40	8541669			Bucket, Drain Hose
41	8541658			Bucket, Drain Hose
42	8565954			Cap, End
43	3347868	W10339879		Tie, Cable
44	8566022			Knob, Timer
45	8566018			Dial,
46	8519200			Support, Rear Panel
47	8565944			Knob, Control
48	8577378			U-Bend, Drain Hose
49	8314879			Shield, Inlet Valve
50	3957374			Harness, Wiring

the laundry company®