Whirlpool 7MWC87730TM1 01 - TOP AND CABINET PARTS

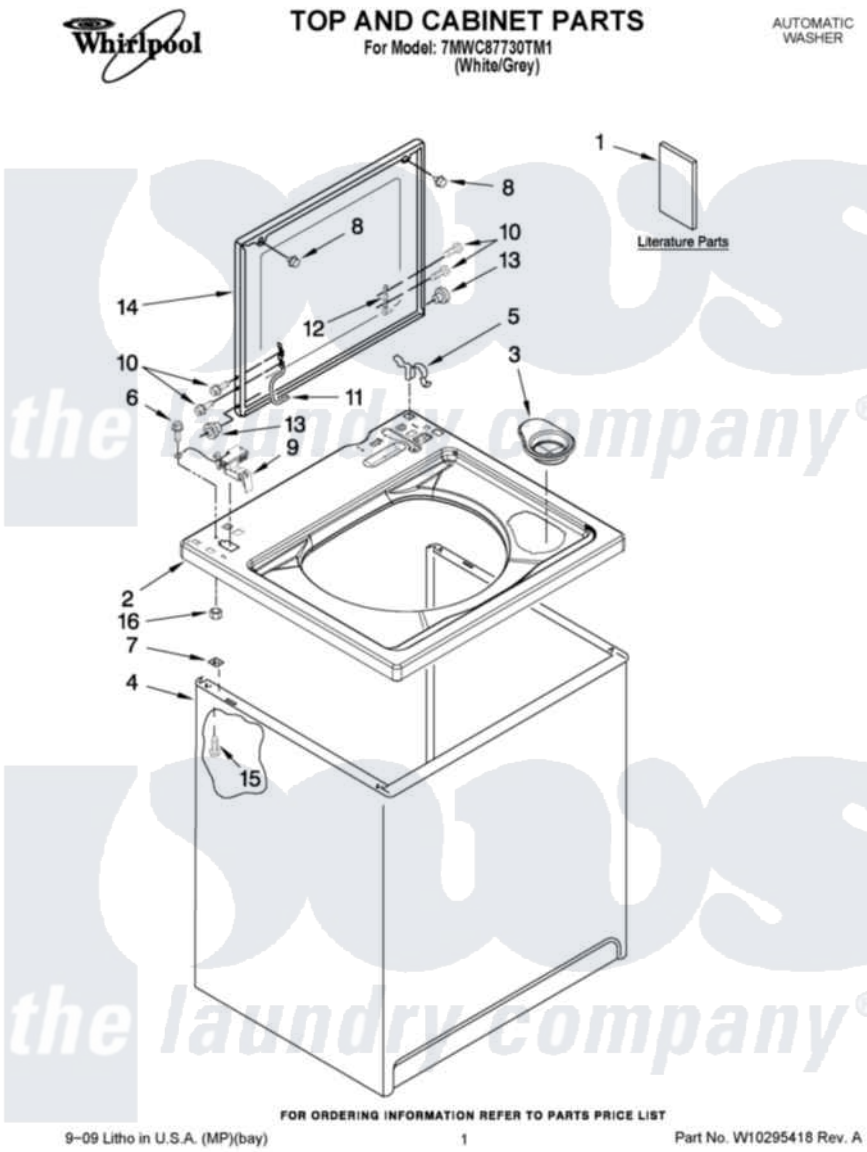

Whirlpool Residential Whirlpool 7MWC87730TM1 Washer Parts Parts Diagram 01 - TOP AND CABINET PARTS
Click on the part number to view part

Item	Original Part Number	Replaced By	Status	Part Description
1	W10155455		Not Available	Installation Instructions
"	W10131552		Not Available	Feature Sheet
"	W10213638		Not Available	Use & Care Guide
"	W10131563		Not Available	Energy Guide (Mexico)
"	W10224331		Not Available	Wiring Diagram
2	8566017			Top
3	8566266			Dispenser, Bleach
4	63424			Cabinet
5	62780			Clip, Top And Cabinet And Rear Panel
6	3351614			Screw, Gearcase Cover Mounting
7	62750			Spacer, Cabinet To Top (4)
8	9724509			Bumper, Lid
9	8318084			Switch, Lid
10	W10119828			Screw, Lid Hinge Mounting
11	W10225136			Hinge 7 Pad Assembly

12	91770		Hinge, Lid
13	8319539		Bearing, Lid Hinge
14	W10171313	W10193861	Lid
15	3390631		Screw, 10-16 X 3/8
16	8533959	680762	Nut

the laundry company®
the laundry company®
the laundry company®