Whirlpool 7MWFW95HEYL0 04 - DISPENSER PARTS

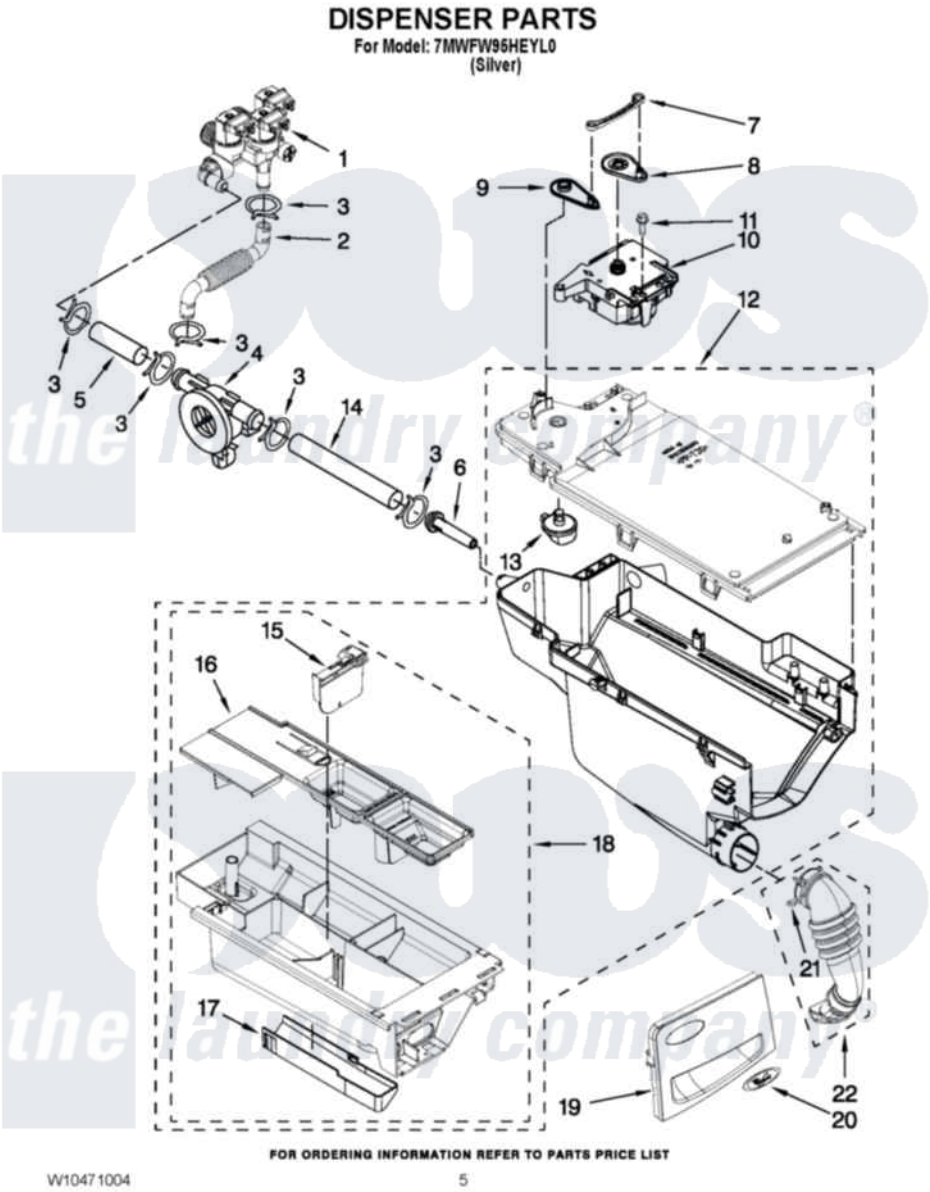

Whirlpool Residential Whirlpool 7MWFW95HEYL0 Washer Parts Parts Diagram 04 - DISPENSER PARTS
Click on the part number to view part

Item	Original Part Number	Replaced By	Status	Part Description
1	W10247306			Valve, Inlet
2	W10239949			Hose, Inlet Valve To Active Vent
3	370450	596669		Clamp, Manifold
4	8181696	W10110225		Flowmeter
5	W10239935			Hose, Inlet Valve To Flowmeter
6	8183181			Nozzle, Inlet
7	8183183			Lever, Water Distribution
8	W10003190	8183184		Cam, Actuator
9	W10183517			Lever, Water Distribution
10	W10163975	W10352973		Actuator
11	8540282	8181661		Screw, Actuator
12	W10351808			Housing, Dispenser Assembly
13	W10003110	8181712		Nozzle, Distribution
14	W10239936			Hose, Flowmeter To Dispenser
15	W10015200	W10121596		Separator, With Selection

15	W10015200	W10121396	Slider
16	W10256661		Siphon, Bleach/Softener
17	W10003140	8183179	Cover, Detergent Drawer
18	W10256683		Drawer, Detergent
19	W10327027		Handle, Dispenser Drawer
20	W10117943	8303811	Badge, Assembly
21	W10239910		Clamp, Hose
22	W10239966		Hose, Dispenser To Bellow

the laundry company®
the laundry company®
the laundry company®