Whirlpool CGDS563SQ0 01 - TOP AND CONSOLE PARTS

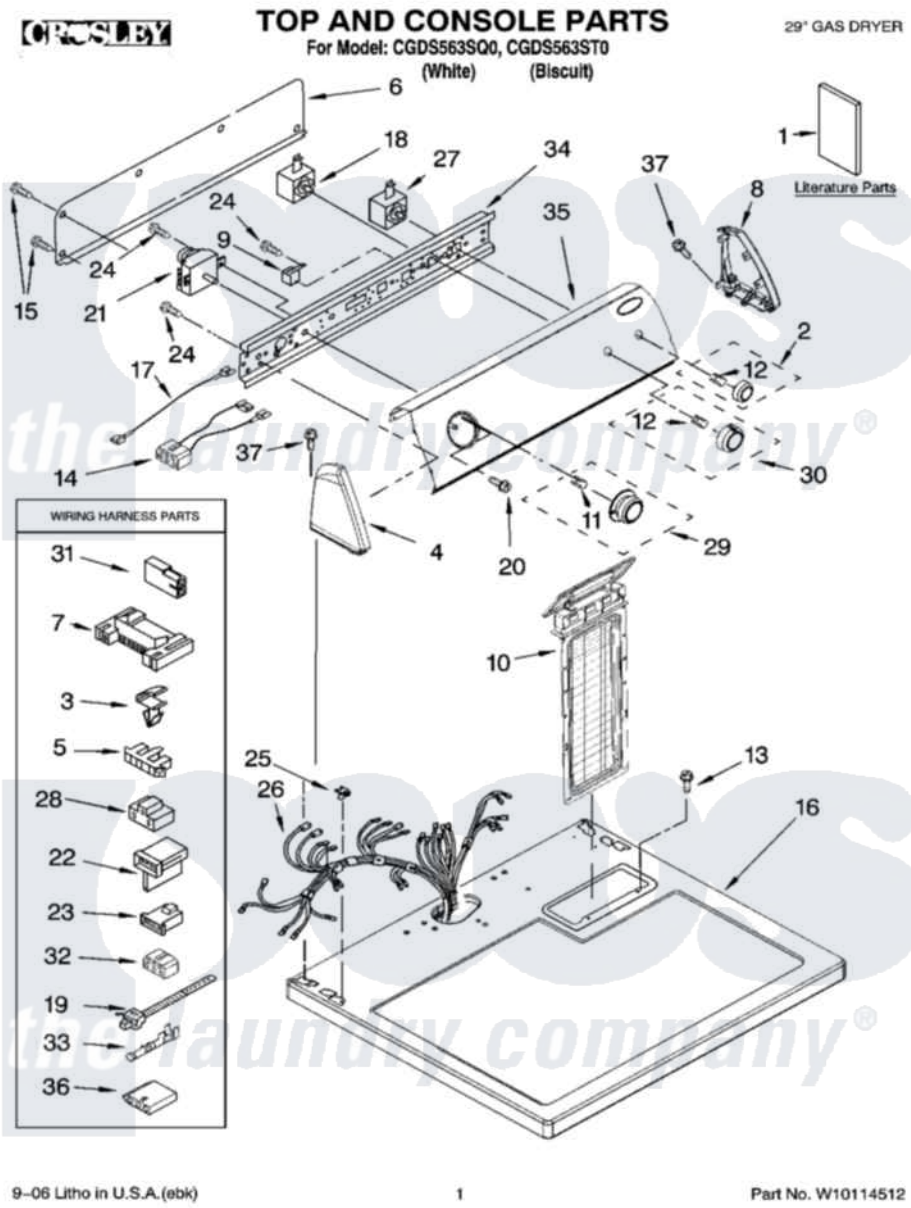

Whirlpool Residential Whirlpool CGDS563SQ0 Dryer Parts Parts Diagram 01 - TOP AND CONSOLE PARTS
Click on the part number to view part

Item	Original Part Number	Replaced By	Status	Part Description
1	8562589		Not Available	Instructions, Installation
"	W10112315		Not Available	Sheet, Cycle Feature
"	8578544		Not Available	Guide, Use & Care
"	3979703		Not Available	Wiring Diagram
"	BLANK		Not Available	Following May Be Purchased DO-IT-YOURSELF REPAIR MANUALS
"	677818		Not Available	Manual, Do-It- Yourself Repair (Dryer)
2	8538959			Knob, Push-To-Start
3	3394427			Clip-Harness
4	8271365	279962		Endcap
"	8271368	279965		Endcap
5	3397269			Connector, Timer
6	8274261			Do-It-Yourself Repair Manuals
7	3395683			Receptacle, Multi-Terminal
8	8271359	279962		Endcap

"	8271362	279965	Endcap
9	694419		Mini-Buzzer
10	8558463		HAndle And Lint Screen Assembly
"	8558464		Screen, Lint
11	688805		Clip, Spring Knob
12	8536939		Clip, Knob
13	688983	487240	Screw, For Mtg. Service Capacitor
14	3396028	8283286	Wire-Jumper
15	693995		Screw, Hex Head
16	8557930	8563985	Top
"	8557931	8563986	Top
17	3401668		Wire, Jumper
"	3401671		Wire, Jumper
18	3399638		Switch, Temperature
19	3391249		Cable Tie, Push Mount
20	8533951	3400859	Screw, Grounding
21	8299766		Timer Assembly
22	3403499		Connector, 2-Postion
23	3403498		Connector, 3-Position
24	8533971	90767	Screw, 8A X 3/8 HeX Washer Head Tapping
25	357213		Nut, Push-In
26	8299878		Harness, Wiring
27	3398094		Switch, Push To Start
28	3401144		Connector
29	8538953		Timer Knob Assembly
30	8538957		Knob, Control
31	717252		Receptacle, Terminal
32	3347243		Block, Disconnect
33	94614		Terminal
34	8271418		Bracket, Control
35	W10111095		Panel, Control
"	W10111096	W10151367	Panel-Control
36	3936144		Do-It-Yourself Repair Manuals
37	388326		Screw, 8-18 X 1.25

the laundry company®