Whirlpool GGW9250PT3 01 - TOP AND CONSOLE PARTS

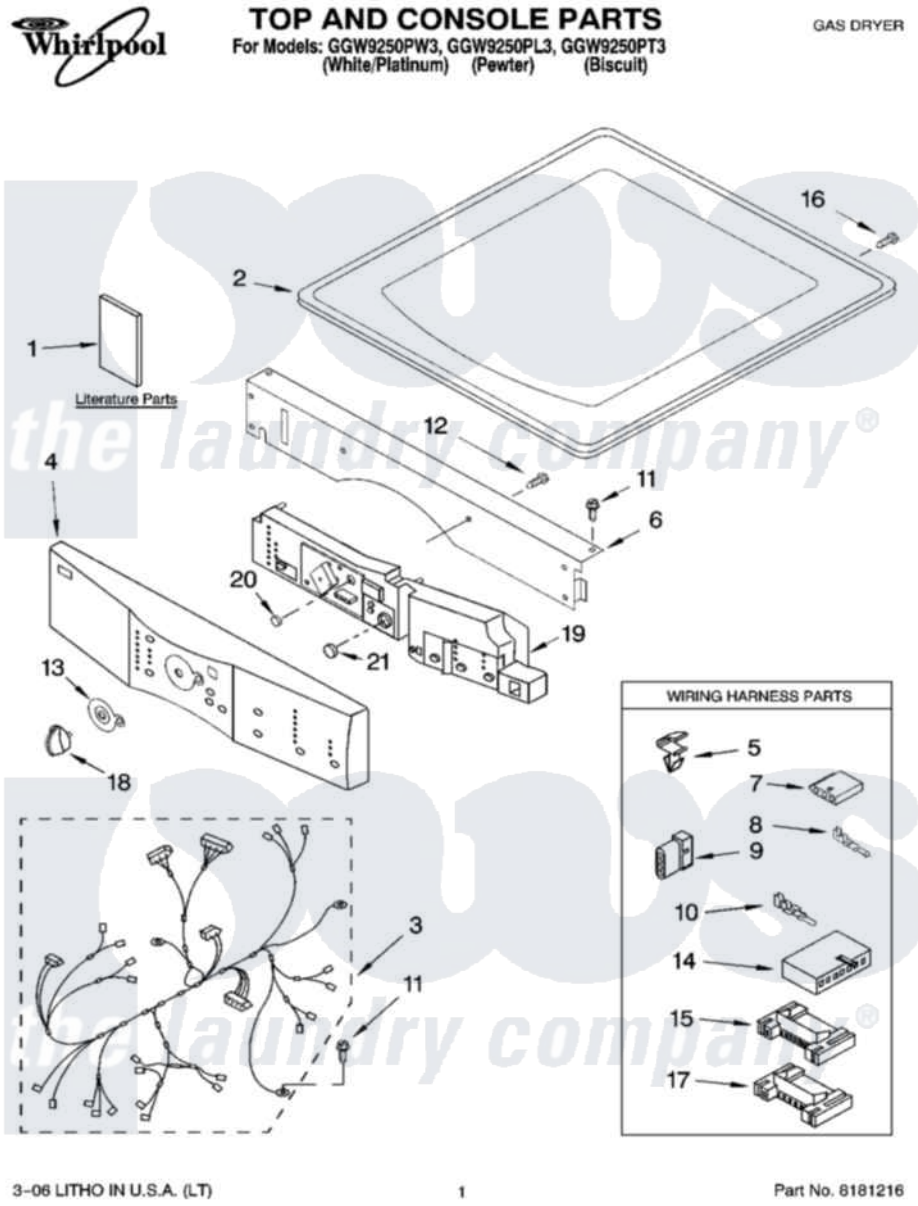

Whirlpool Residential Whirlpool GGW9250PT3 Dryer Parts Parts Diagram 01 - TOP AND CONSOLE PARTS
Click on the part number to view part

Item	Original Part Number	Replaced By	Status	Part Description
1	8578186		Not Available	Use & Care Guide
"	8558723		Not Available	Tech Sheet
"	8563723		Not Available	Guide, Quick Start
2	8519251	W10117263		Top
"	3980096	3980357		Top
"	8519252	3979307		Top
3	8299950			Harness, Main
4	8558748			Panel, Console
"	8558751			Panel, Console
"	8558750			Panel, Console
5	3394427			Clip-Harness
6	8519271			Bracket, Console
7	353424			Plug, Terminal
8	94614			Terminal
9	3936144			Do-It-Yourself Repair Manuals
10	94613	596797		Terminal

11	3390647	488729	Screw
12	488886	488787	Screw
13	8519406		Bezel, Cycle
14	3936150		Connector, 7-Circuit
15	3395683		Receptacle, Multi-Terminal
16	8281225		Screw, 8-18 X 1/2
17	2203186		Connector, 5-Circuit
18	46197020472	8181859	Knob, Control
"	46197020742	8182050	Knob, Control
"	46197020741	8182049	Knob, Control
19	8558753		User Interface
"	8558756		User Interface
"	8558755		User Interface
20	8561811		Button, Start
21	8561812	Not Available	Button, Pause/Cancel

the laundry company®
the laundry company®
the laundry company®