Whirlpool GGW9250PT3 02 - CABINET PARTS

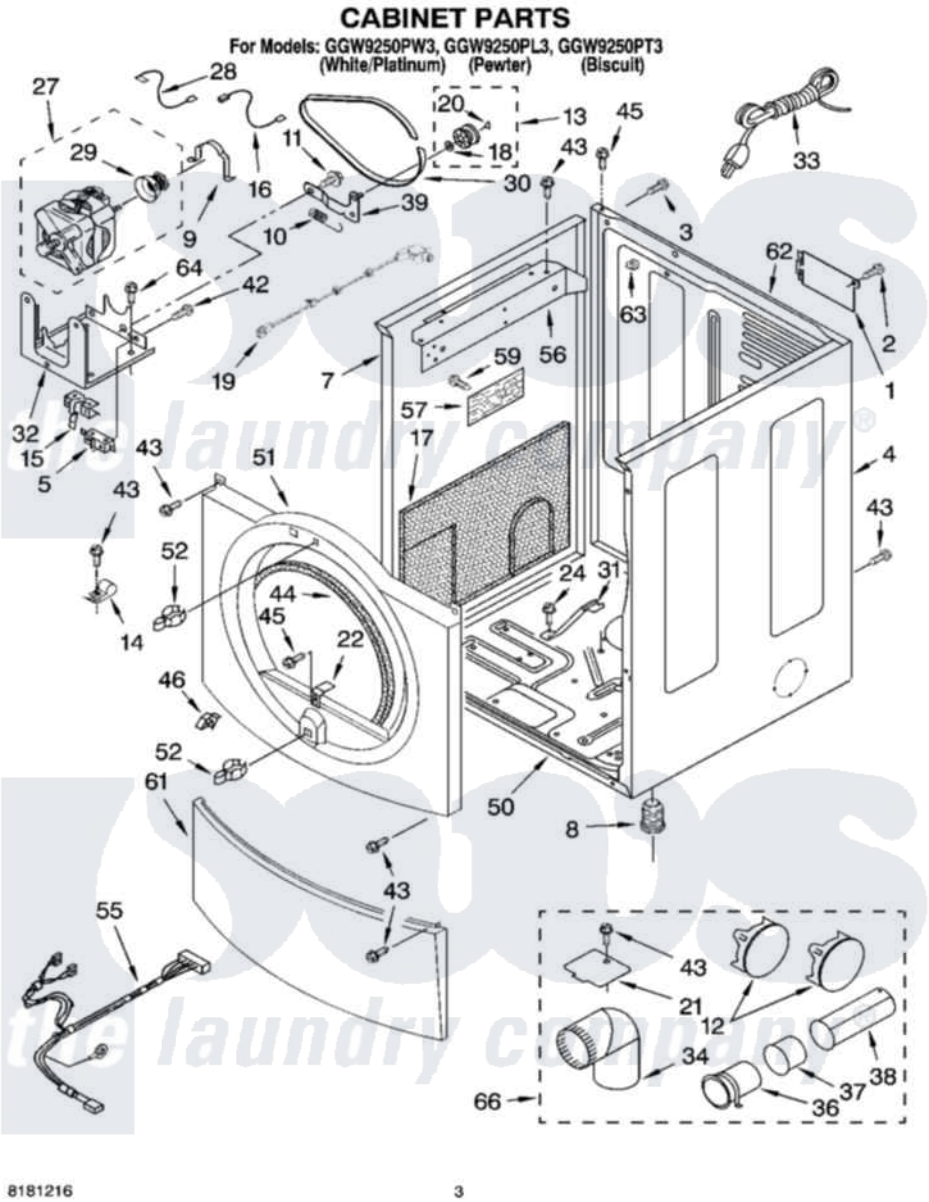

Whirlpool Residential Whirlpool GGW9250PT3 Dryer Parts Parts Diagram 02 - CABINET PARTS
Click on the part number to view part

Item	Original Part Number	Replaced By	Status	Part Description
1	8317340			Cover, Terminal Block
2	3390814	90767		Screw, 8A X 3/8 HeX Washer Head Tapping
3	697776	4331106		Screw, No.10-32 X 7/16
4	8519213	W10131287		Panel
"	8519217	3980359		Panel
"	8519214	W10131288		Panel
5	3394881	279782		Switch-Lid
7	8519209	W10131287		Panel
"	8519216	3980358		Panel
"	8519210	W10131288		Panel
8	3392100	49621		Feet-Leveling
"	279810			Foot-Optional
9	660658			Clamp, Motor Mounting 343481 685441
10	3387374			Spring, Idler
11	3389420			Retainer-Idler 1/4-20 X 1/16

12	697750	W10470674		Dryer Exhaust Kit
"	3979261			Plug, Multivent
"	3388311			Plug, Multivent
13	3388672	279640		Pulley-Idr
14	3978776			Bracket, Gas Pipe Switch
15	8066120			Lever, Door Switch
16	3394081			Wire, Broken Belt Switch
17	8564132	8564134		Board, Sound Dampening
18	233520			Washer, Thrust
19	8574875	W10318609		Switch, Assembly Door
20	690997			Washer, Thrust
21	8066115	3394331		Plate Cover
22	8529053			Ramp, Door Door Switch
24	693995			Screw, Hex Head
27	8538263	279787		Motor-Drve
28	3398948			Wire, Jumper
29	8578220			Pulley, Motor
30	3387610	661570		Belt
31	8529757			Bracket, Burner
32	3387118			Bracket, Motor
33	3401401	3401402		Cord, Power
34	49026			4" - 90° Elbow
36	8563747			Exhaust Pipe Medium Pipe
37	8563750			Exhaust Pipe
38	8563749			Exhaust Pipe
39	3388674	W10118756		Idler Bracket
42	98129			Screw, 6-20 X 1 1/16
43	3390647	488729		Screw
44	3387242			Seal, Front Panel
45	3393008	308685		Side Trim)
46	8519459			Clip, Toe Panel
50	8519207			Base, Cabinet
51	8562167	280096		Panel
"	8562169	280098		Panel
"	8562168	280097		Panel
52	696144	279570		Latch
55	8299929			Harness, Digital Interface
56	8519273	W10119274		Bracket, Control
57	8546219			Control Board
59	3400826			Screw, 8-18 X 3/4
61	8519233			Toe, Panel
"	3980095			Toe, Panel
"	8519234			Toe, Panel
62	8519219	280036		Panel-Rear
63	692400			Nut, Push-In
64	343641	681414		Screw, 10AB X 1/2
"	BLANK		Not Available	Optional Parts Not Included
66	279818	W10470674		Dryer Exhaust Kit
"	279969	W10470674		Dryer Exhaust Kit
"	279925	W10470674		Dryer Exhaust Kit

the laundry company®