Whirlpool GHW9250MW2 03 - CONTROL PANEL PARTS

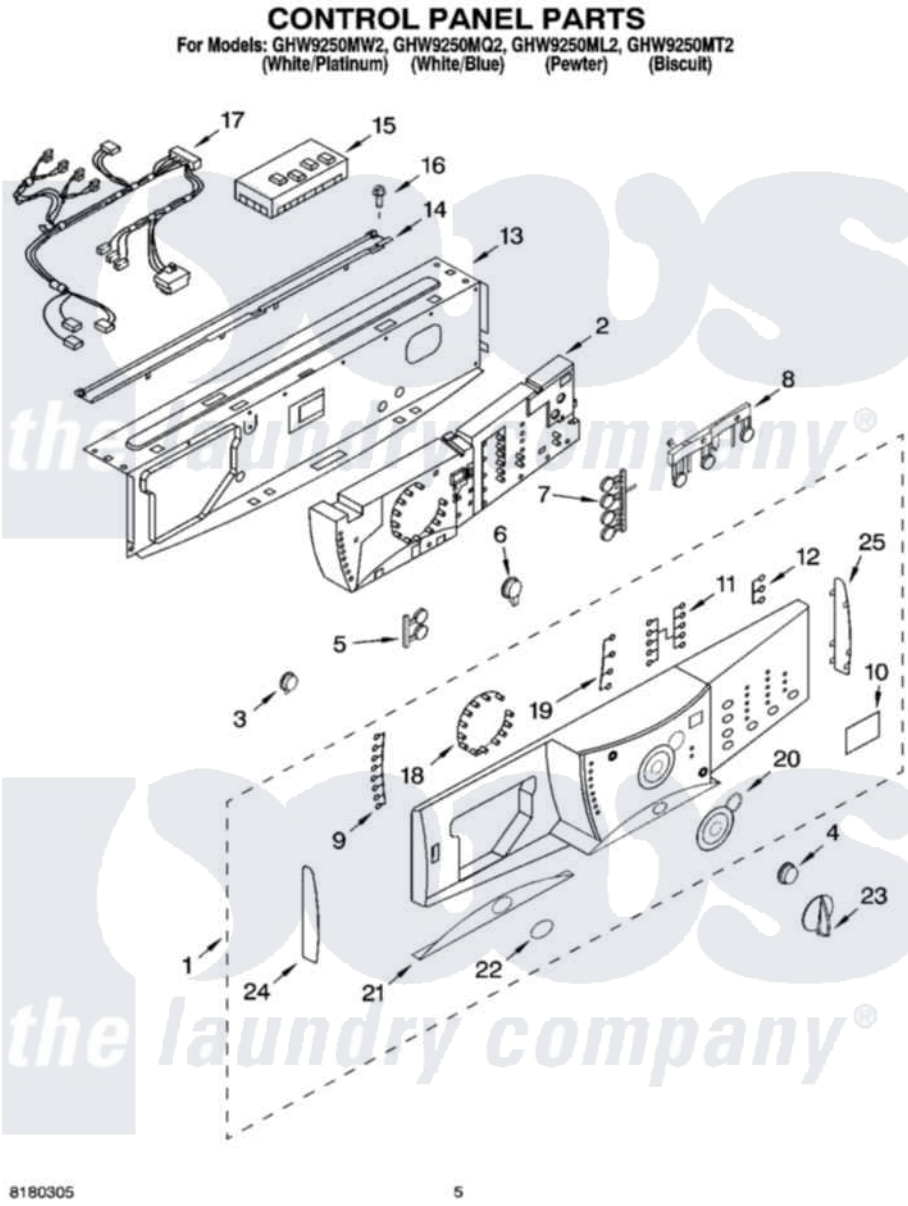

Whirlpool Residential Whirlpool GHW9250MW2 Washer Parts Parts Diagram 03 - CONTROL PANEL PARTS
Click on the part number to view part

Item	Original Part Number	Replaced By	Status	Part Description
1	8182088		Not Available	Panel, Control (Platinum)
"	8182089			Panel, Control
"	8182090			Panel, Control
"	8182091			Panel, Control
2	8182056			User Interface
3	8181860			Button, Power
4	8181861			Button, Start
5	8181863			Button Set, Soil Level
"	8181882			Button Set, Soil Level
"	8182052			Button Set, Soil Level
"	8182053			Button Set, Soil Level
6	8181862			Button, Pause/Cancel
7	8181864			Button Set, Options
"	8181883			Button Set, Options
"	8182068			Button Set, Options
"	8182069			Button Set, Options

8	8181865			Button Set, Spin/Temperature
"	8181884			Button Set, Spin/Temperature
"	8182054			Button Set, Spin/Temperature
"	8182055			Button Set, Spin/Temperature
9	8181868			Light, Indicator
10	8181856			Window, Display
11	8181870			Light, Indicator
12	8181871			Light, Indicator
13	8182224		Not Available	Brace, Front Top
14	8181640	8182800		Channel, Water
15	8182220	8182664		Control-Elec
16	8181756	488729		Screw
17	8182212			Harness, Wiring
18	8182058			Light, Indicator
19	8181869			Light, Indicator
20	8181855			Bezel, Knob
21	8181857			Overlay, Door
22	8181858	8303811		Badge, Assembly
23	8181859			Knob, Control
"	8181881			Knob, Control
"	8182050			Knob, Control
"	8182049			Knob, Control
24	8181852			Endcap, Left
"	8182064			Endcap, Left
"	8182066			Endcap, Left
25	8181853			Endcap, Right
"	8182065			Endcap, Right
"	8182067			Endcap, Right

the laundry company®