Whirlpool GHW9400PT0 06 - PUMP AND MOTOR PARTS, OPTIONAL PARTS (NOT INCLUDED)

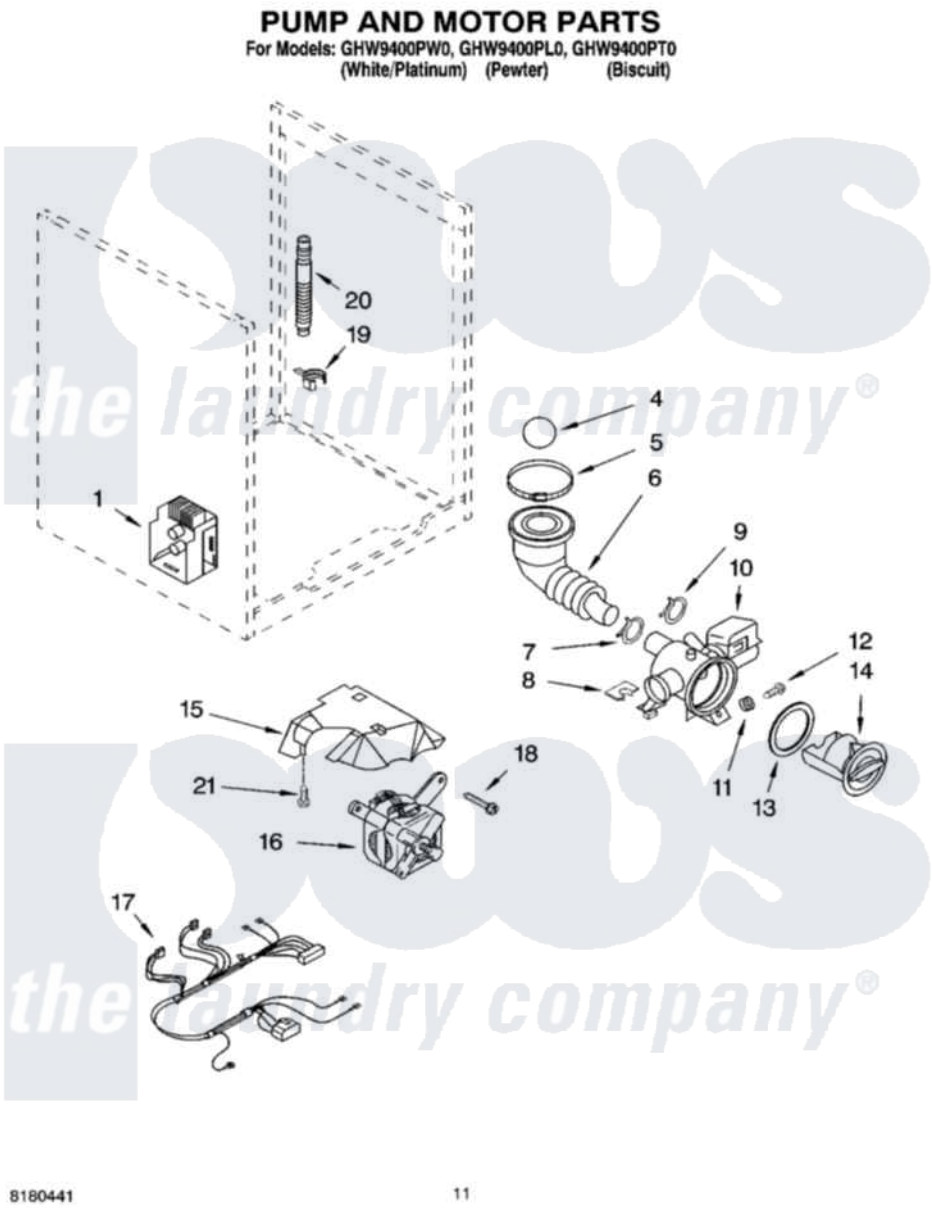

Whirlpool Residential Whirlpool GHW9400PT0 Washer Parts Parts Diagram 06 - PUMP AND MOTOR PARTS, OPTIONAL PARTS (NOT INCLUDED)
Click on the part number to view part

Item	Original Part Number	Replaced By	Status	Part Description
1	8181693	8182706		Control Unit
4	8181733	W10121657		Ball
5	8181734	696392		Hose Clamp
6	8181732			Hose, Tub To Pump
7	8181753	285655		Clamp, Hose
8	8181786	280181		Grommet
9	8181752	3367052		Clamp, Hose
10	8181684	280187		Pump-Water
11	8181787	280182		Grommet
12	8181780			Screw
13	8181736			Seal, Filter Cap
14	8181735			Cap, Filter
15	8181766			Cover, Motor
16	8181682	8182793		Motor, Drive
17	8181782	W10137867		Harns-Wire

18	8181761	W10128585	Bolt, Motor
19	8181755	8182209	Retainer, Drain Hose
20	8181740	W10003250	Hose, Drain-Inner
21	8181757	3186940	Screw
	72017		Paint, Touch-Up
"	4396174		Paint, Touch-Up
"	4392899		Paint, Touch-Up
"	350938		Paint, Pressurized Spray B
"	350930		Paint, Pressurized Spray B
"	4396175		Paint, Pressurized Spray
"	4392901		Paint, Pressurized Spray
"	799344		Paint, Touch-Up)
"	4392900		Paint, Bulk)
"	N/A	Not Available	ACCESSORY PARTS
"	285863		Water System Parts

the laundry company®
the laundry company®
the laundry company®