Whirlpool GSX9750PW0 05 - MACHINE BASE PARTS

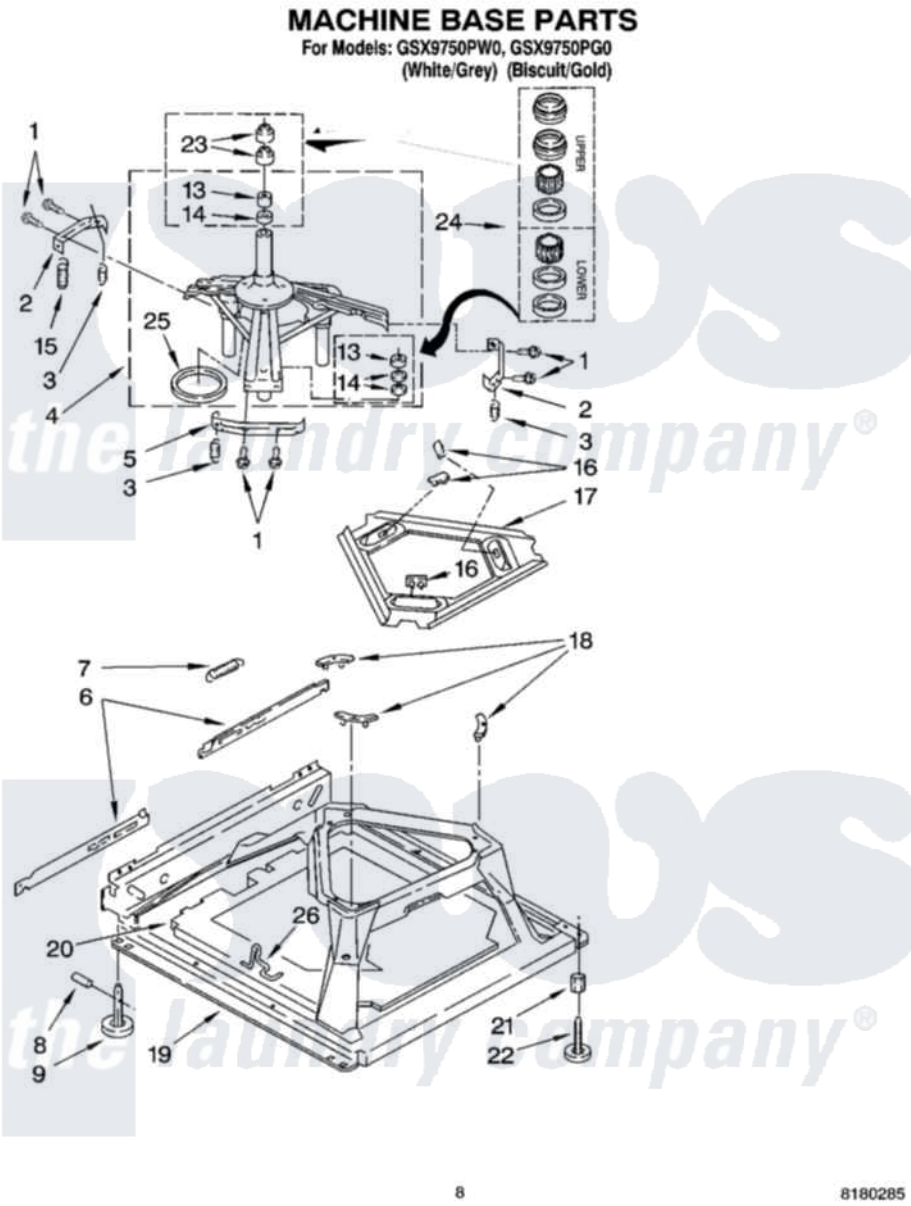

Whirlpool Residential Whirlpool GSX9750PW0 Washer Parts Parts Diagram 05 - MACHINE BASE PARTS
Click on the part number to view part

Item	Original Part Number	Replaced By	Status	Part Description
1	3400076			Screw, Bracket Mounting
2	8282552		Not Available	Bracket, Spring Outer (2)
3	63907			Spring, Suspension
4	3362087	280184		Support
5	8282550			Bracket, Spring Outer
6	63466			Link, Leveling Mechanism
7	62597	8316845		Spring
8	62837			Pin, Knurled
9	62596	285244		Feet-Leveling
13	3347047	8546455		Bearing, Centerpost
14	357409	359449		Seal, Agitator Shaft
15	8318050	285901		Spring
16	62568	285219		Pad
17	3946509			Plate, Suspension
18	3363660	285744		Pad
19	3946512	285771		Base

20	8544816		Absorber, Sound
21	3359452		Nut, Lock
22	389102	W10001130	Foot, Leveling
23	356934	8577376	Seal, Centerpost
24	285203		Centerpost Bearing Kit
25	63134		Ring, Sound Deadening
26	63806	W10145155	Retainer, Suspension Spring

the laundry company®

the laundry company®

the laundry company®