Whirlpool GSX9750PW0 08 - BRAKE AND DRIVE TUBE PARTS

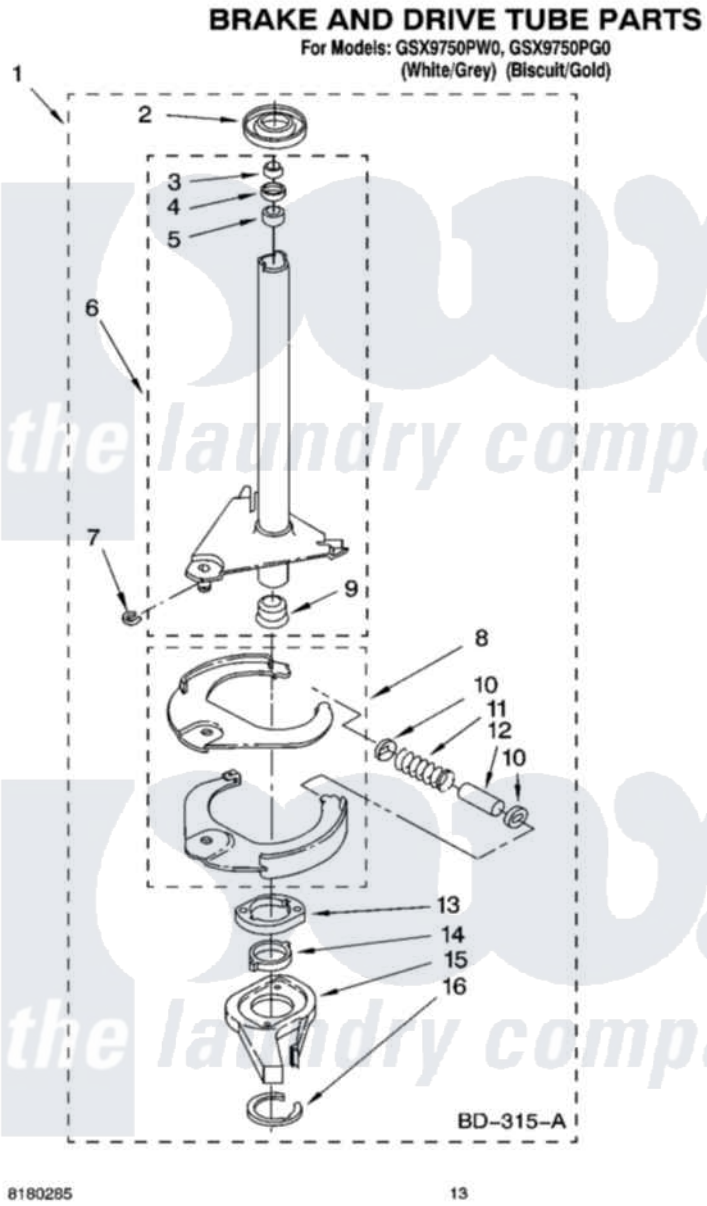

Whirlpool Residential Whirlpool GSX9750PW0 Washer Parts Parts Diagram 08 - BRAKE AND DRIVE TUBE PARTS
Click on the part number to view part

Item	Original Part Number	Replaced By	Status	Part Description
1	388952	285792		Basktdrive
2	62658			Ring, Thrust
3	91939			Seal, Shaft
4	356427			Seal, Spin Pinion
5	356937			Spacer, Drive Tube
6	64027	64208		Tube-Spin
7	64035	W10083190		Ring, Retaining
8	64232	285438		Shoe-Brake
9	62703	8546462		"T" Bearing, Spin Tube
10	62648	285658		Sleeve
11	387806		Not Available	Spring, Brake
12	62909	285658		Sleeve
13	63023	8546461		Cam, Brake Release
14	63022			Sleeve, Cam
15	64194	285790		Lining
16	90368	W10083200		Ring, Retaining

"	N/A	Not Available	FOLLOWING PARTS NOT ILLUSTRATED
"	285208		Lubricant

the laundry company®
the laundry company®
the laundry company®