Whirlpool KGYS750LT1 03 - BULKHEAD PARTS

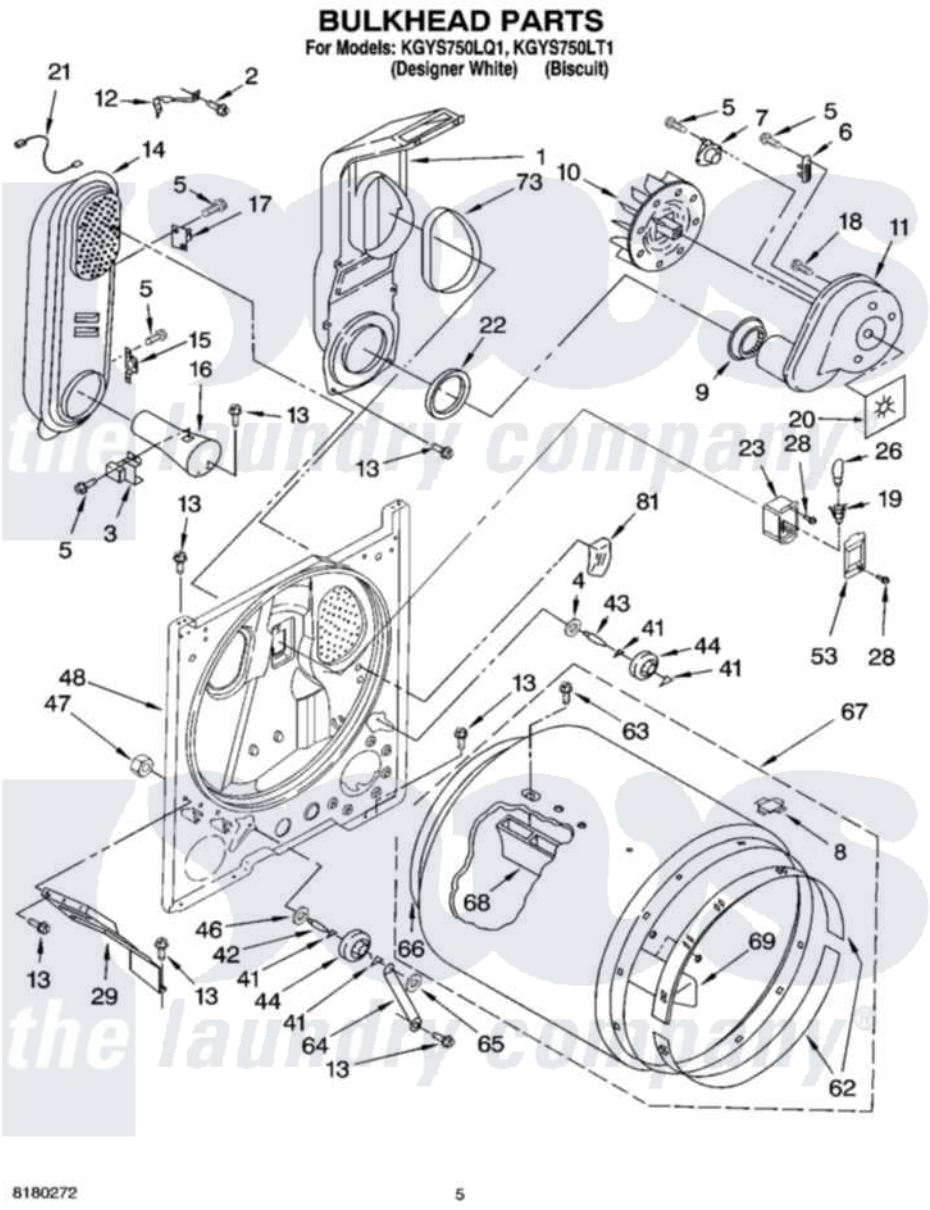

Whirlpool Residential Whirlpool KGYS750LT1 Dryer Parts Parts Diagram 03 - BULKHEAD PARTS
Click on the part number to view part

Item	Original Part Number	Replaced By	Status	Part Description
1	348368			Lint Chute Assembly
2	489463			Screw, 8-18 X 1/16
3	338906			Radiant, Sensor
4	3388703			Washer, Support
5	90767			Screw, 8A X 3/8 HeX Washer Head Tapping
6	3392519			Thermal Limiter
7	3387134			Thermostat, Internal-Bias
8	8066086			Plug, Drum Hole
9	696302			Shield, Exhaust
10	694089			Wheel, Blower
11	8557384	8577230		Housing, Blower
12	3398161			CLIP
13	343641	681414		Screw, 10AB X 1/2
14	8530285	279980		Box
15	3403140			Thermostat, High-Limit 205F
16	8066049			Funnel, Burner Light

17	280010		Kit, Thermal Cut-Off
18	3390647	488729	Screw
19	3403634	W10136369	Socket, Drum Light Assembly
20	3394196		Seal, Blower Shaft
21	3401707		Jumper, Tco-High Limit
22	347139		Seal, Lint Chute
23	3977373		Bracket, Drum Light
26	3406124	22002263	Lamp
28	487909	488729	Screw
29	3406022		Bracket, Bulkhead
41	690997		Washer, Thrust
42	3399506	W10359270	Shaft, Drum Roller Threads
43	3399507	W10359269	Shaft, Drum Roller Threads
44	3397588	349241T	Support
46	348197		Washer, Support
47	3359452		Nut, Lock
48	3403414		Bulkhead
53	3402841	8532165	Lens, Drum Light
62	692526	279441	BeaRng-Rng
63	97787	W10109200	Screw, Baffle Mounting
64	3976434		Bracket, Support Shaft
65	90296		Nut, Push On
66	3406130	279857	Seal
67	695587		Drum Assembly
68	692490		Baffle, Drum
69	3403636		Baffle, Drum
73	339956		Seal, Air Duct To Bulkhead
81	3976479	279366	Electrode
"	N/A	Not Available	ACCESSORY PARTS
"	279948	4392065	Kit, Dryer Repair
"	8522199		Accessory Parts
"	346764		Kit, Hold Down
"	3406839		Dry Rack Assembly
"	72017		Paint, Touch-Up
"	4392899		Paint, Touch-Up
"	350930		Paint, Pressurized Spray B
"	4392901		Paint, Pressurized Spray
"	350938		Paint, Pressurized Spray B
"	799344		Paint, Touch-Up)
"	4392900		Paint, Bulk)

the laundry company®