Whirlpool LBR5432PT1 02 - CONTROLS AND REAR PANEL PARTS

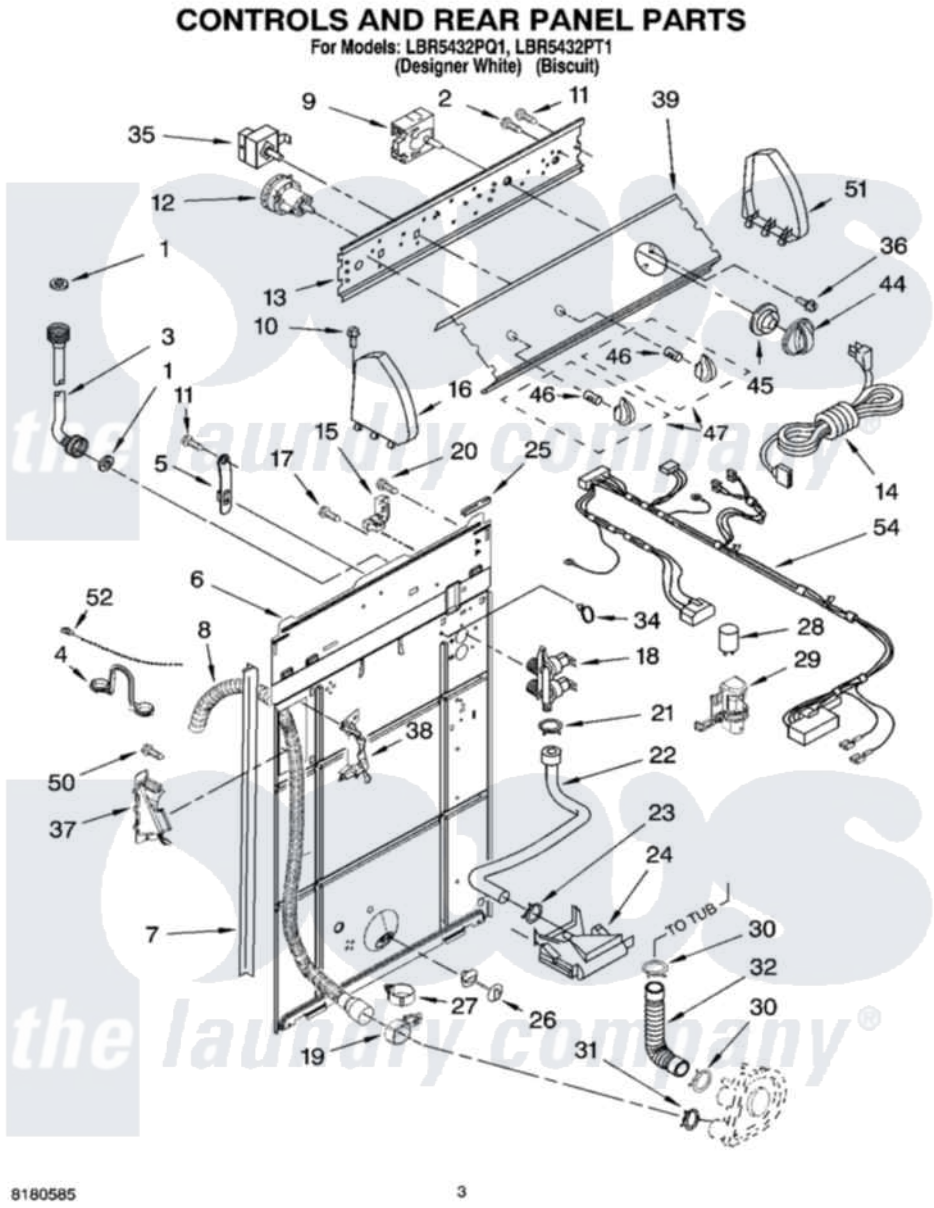

Whirlpool Residential Whirlpool LBR5432PT1 Washer Parts Parts Diagram 02 - CONTROLS AND REAR PANEL PARTS
Click on the part number to view part

Item	Original Part Number	Replaced By	Status	Part Description
1	3976300	16123		Washer Inlet-Hose Miscellaneous Parts Must be Ordered Separately.
2	3400073			Screw, Ground
3	8571377	89503		Hose-Inlet
"	8571378	89503		Hose-Inlet
4	8541672	8577378		U-Bend, Drain Hose
5	8318255	8568314		Strap, Console
6	8541686			Panel, Rear
7	62747			Pad, Rear Panel
8	8559373	W10096921		Drain Hose Assembly
9	8557226			Timer, Control
10	388326			Screw, 8-18 X 1.25
11	90767			Screw, 8A X 3/8 HeX Washer Head Tapping
12	3366849	W10339228		Switch-WL
13	3948814			Bracket, Control

14	661661	285800		Cord-Power
15	3952821	285777		Relief-Str
16	8271365	279962		Endcap
"	8271368	279965		Endcap
17	9740848			Screw, Mixing Valve Mounting
18	3955673	285805		Valve-Inlet
19	8541668			Clamp, Hose
20	3351614			Screw, Gearcase Cover Mounting
21	301958	596669		Clamp, Manifold
22	8541607	3357328		Hose, Vacuum Break
23	370450	596669		Clamp, Manifold
24	3347034			Break, Vacuum
25	303294	3367669		Protector, Edge
26	8519200			Support, Rear Panel
27	8541667			Clamp, Hose
28	661606	8572717		Capacitor, Motor Start
29	8318046			Clip, Capacitor
30	3363366	616099		Clamp
31	8317496	285655		Clamp, Hose
32	3951449	285871		Hose
34	8559320			Restraint, Hose
35	661612	W10168256		Switch, Water Temperature
36	3400818			Screw, Timer Mounting
37	8541669			Bucket, Drain Hose
"	BLANK		Not Available	(Left Half)
38	8541658			Bucket, Drain Hose
"	BLANK		Not Available	(Right Half)
39	3956558			Panel, Console
"	3956578			Panel, Console
44	8544943			Knob, Timer
"	8544944			Knob, Timer
45	8544947			Dial, Timer
"	8544948			Dial, Timer
46	8536939			Clip, Knob
47	8544935			Knob, Control
"	8544936			Knob, Control
50	62863	3390631		Screw, 10-16 X 3/8
51	8271359	279962		Endcap
"	8271362	279965		Endcap
52	3347868	W10339879		Tie, Cable
54	3957021			Harness, Wiring

the laundry company®