Whirlpool LEC9000PW0 03 - BULKHEAD PARTS, OPTIONAL PARTS (NOT INCLUDED)

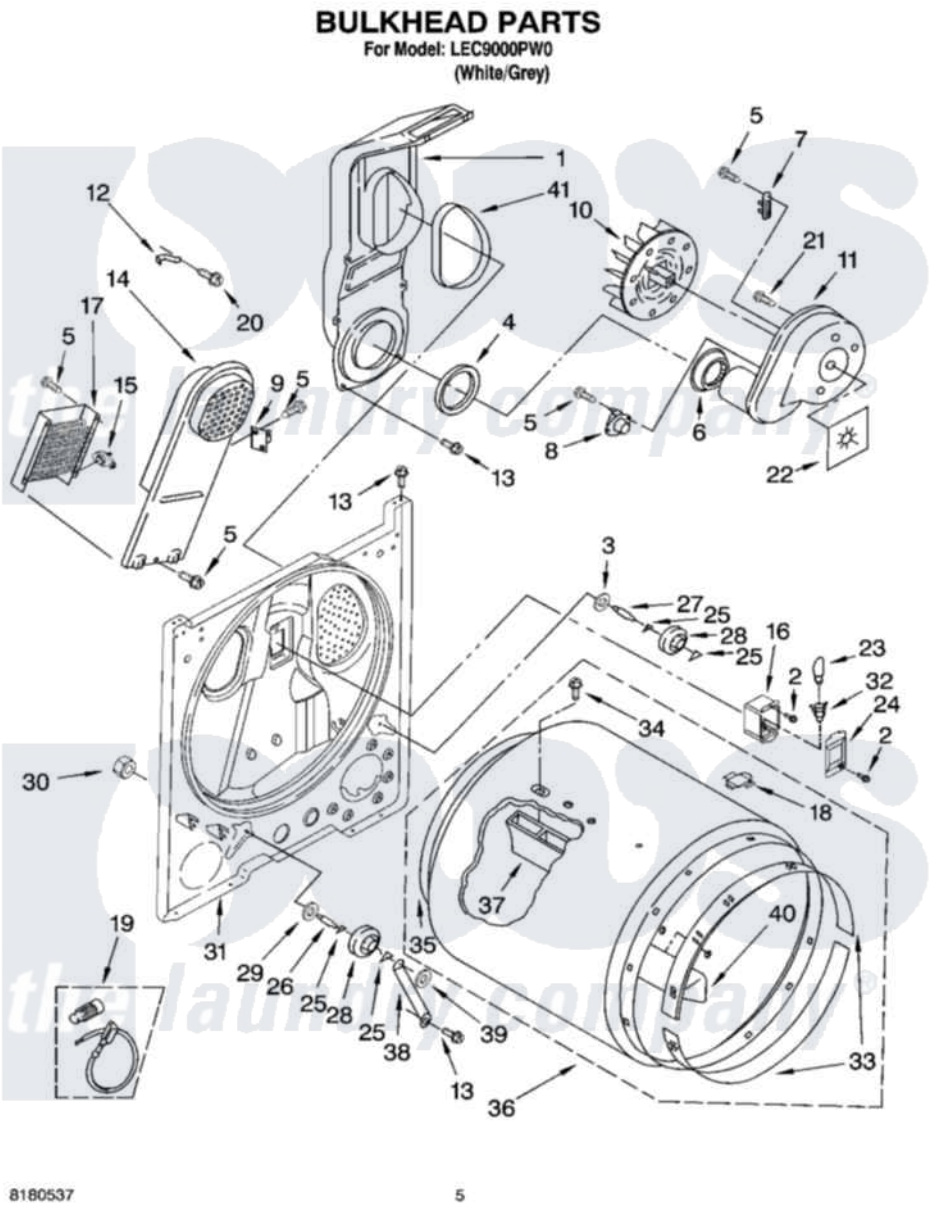

Whirlpool Residential Whirlpool LEC9000PW0 Dryer Parts Parts Diagram 03 - BULKHEAD PARTS, OPTIONAL PARTS (NOT INCLUDED)
Click on the part number to view part

Item	Original Part Number	Replaced By	Status	Part Description
1	348368			Lint Chute Assembly
2	487909	488729		Screw
3	3388703			Washer, Support
4	347139			Seal, Lint Chute
5	90767			Screw, 8A X 3/8 HeX Washer Head Tapping
6	696302			Shield, Exhaust
7	3392519			Thermal Limiter
8	3387134			Thermostat, Internal-Bias
9	3977393	279816		Cutoff-Tml
10	694089			Wheel, Blower
11	8557384	8577230		Housing, Blower
12	3398161			CLIP
13	343641	681414		Screw, 10AB X 1/2
14	8541818			Box, Heater

15	3977767			Thermostat, High Limit 250 F
16	3977373			Bracket, Drum Light
17	8565582	279838		Element
18	8066086			Plug, Drum Hole
19	279457			Wire Kit, Terminal
20	489463			Screw, 8-18 X 1/16
21	3390647	488729		Screw
22	3394196			Seal, Blower Shaft
23	3406124	22002263		Lamp
24	3402841	8532165		Lens, Drum Light
25	690997			Washer, Thrust
26	3399506	W10359270		Shaft, Drum Roller Threads
27	3399507	W10359269		Shaft, Drum Roller Threads
28	3397588	349241T		Support
29	348197			Washer, Support
30	3359452			Nut, Lock
31	3403413			Bulkhead
32	3403634	W10136369		Socket, Drum Light Assembly
33	692526	279441		BeaRng-Rng
34	97787	W10109200		Screw, Baffle Mounting
35	3406130	279857		Seal
36	695587			Drum Assembly
37	692490			Baffle, Drum
38	3976434			Bracket, Support Shaft
39	90296			Nut, Push On
40	3403636			Baffle, Drum
41	339956			Seal, Air Duct To Bulkhead
	N/A		Not Available	ACCESSORY PARTS
"	279948	4392065		Kit, Dryer Repair
"	3406839			Dry Rack Assembly
"	8522199			Accessory Parts
"	72017			Paint, Touch-Up
"	350930			Paint, Pressurized Spray B
"	350938			Paint, Pressurized Spray B
"	799344			Paint, Touch-Up)

the laundry company®