Whirlpool LGQ8621PW2 01 - TOP AND CONSOLE PARTS

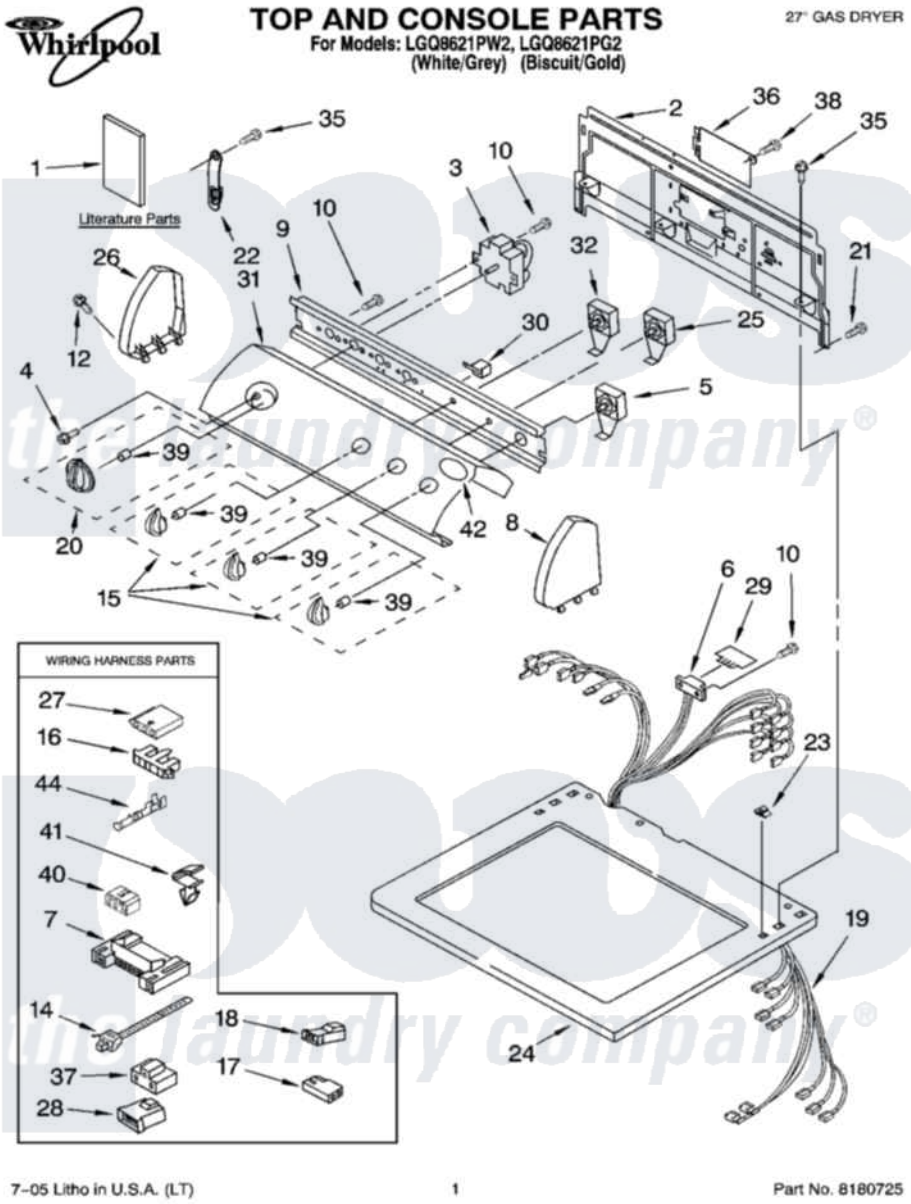

Whirlpool Residential Whirlpool LGQ8621PW2 Dryer Parts Parts Diagram 01 - TOP AND CONSOLE PARTS
Click on the part number to view part

Item	Original Part Number	Replaced By	Status	Part Description
1	8565618		Not Available	Wiring Diagram
"	8533772		Not Available	Guide, Use & Care
"	8533770		Not Available	Sheet, Cycle Feature
"	8557498		Not Available	Instructions, Installation
"	N/A		Not Available	Following May Be Purchased DO-IT-YOURSELF REPAIR MANUALS
"	677818		Not Available	Manual, Do-It- Yourself Repair (Dryer)
2	8317305	285909		Panel-Rear
3	8566184			Timer Assembly
4	8533951	3400859		Screw, Grounding
5	3398095			Switch, Push-To-Start
6	3391885			Connector, Edge
7	3395683			Receptacle, Multi-Terminal
8	8271359	279962		Endcap
"	8271362	279965		Endcap

9	8544897		Bracket, Control
10	8533971	90767	Screw, 8A X 3/8 HeX Washer Head Tapping
12	388326		Screw, 8-18 X 1.25
14	3391018		Tie Cable
15	8544937		Knob, Control
"	8544938		Knob, Control
16	3397269		Connector, Timer
17	717252		Receptacle, Terminal
18	3403499		Connector, 2-Postion
19	8530008		Harness, Wiring
20	8544957		Timer Knob Assembly
"	8544958		Timer Knob Assembly
21	693995		Screw, Hex Head
22	8568314		Strap, Console
23	357213		Nut, Push-In
24	8271399	3979278	Top
"	8271401	3979279	Top
25	3405156		Switch, Rotary
26	8271365	279962	Endcap
"	8271368	279965	Endcap
27	3936144		Do-It-Yourself Repair Manuals
28	3403498		Connector, 3-Position
29	8558178		Control, Electronic
30	694419		Mini-Buzzer
31	8546005		Panel, Control
"	8546006		Panel, Control
32	8530169		Switch, Temperature
35	3390647	488729	Screw
36	8317340		Cover, Terminal Block
37	3401144		Connector
38	3390814	90767	Screw, 8A X 3/8 HeX Washer Head Tapping
39	8536939		Clip, Knob
40	3347243		Block, Disconnect
41	3394427		Clip-Harness
42	3400985		Medallion
44	94614		Terminal

the laundry company®