Whirlpool LSQ9010PG2 03 - AGITATOR, BASKET AND TUB PARTS

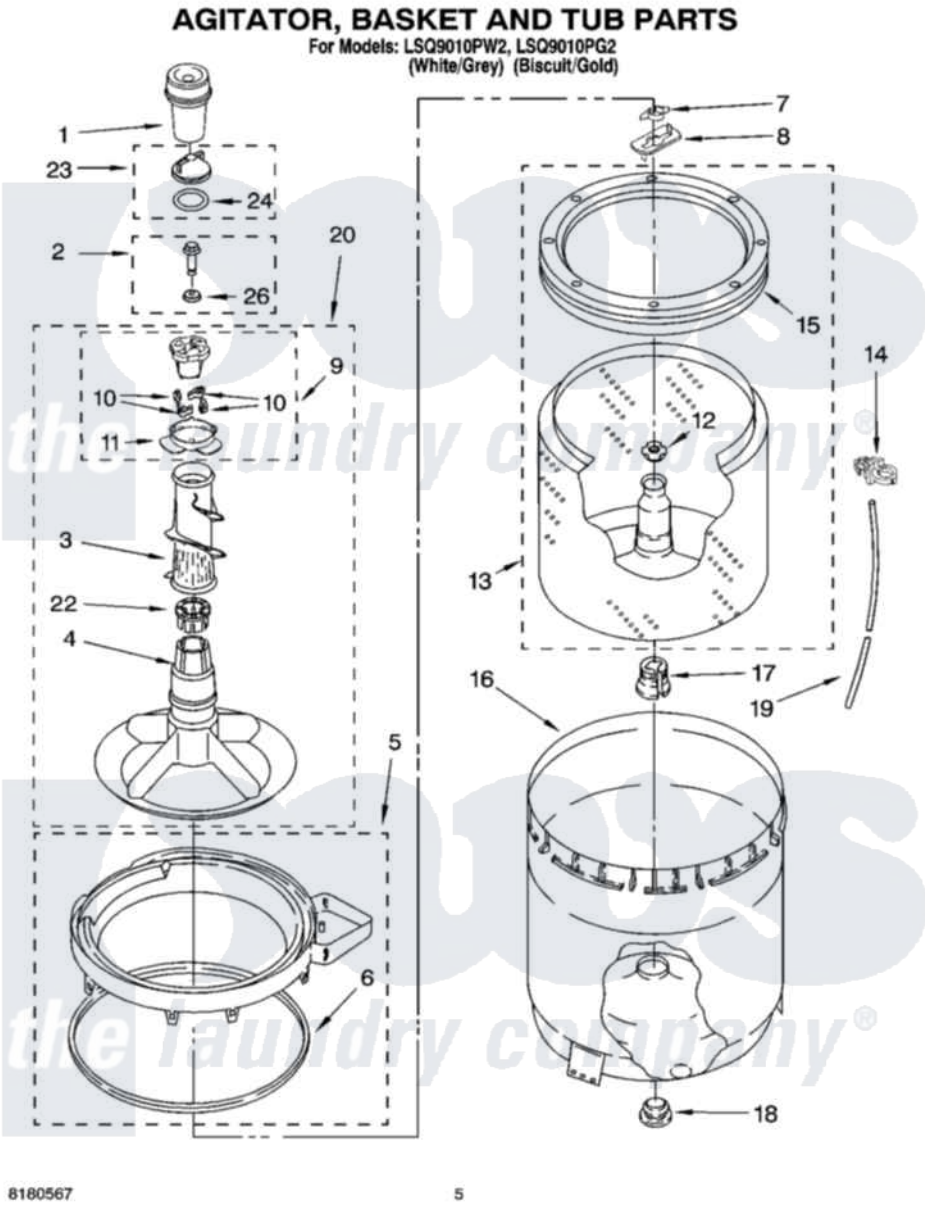

Whirlpool Residential Whirlpool LSQ9010PG2 Washer Parts Parts Diagram 03 - AGITATOR, BASKET AND TUB PARTS

Click on the part number to view part

Item	Original Part Number	Replaced By	Status	Part Description
1	63580			Dispenser, Fabric Softener
2	358237			Screw And Washer
3	3363003			Mover, Clothes
4	3951632			Agitator
5	8528150	W10445870		Ring-Tub
6	3976308			Gasket, Tub Ring
7	3354845			Clip, Agitator
8	3355921	8543666		Washer, Agitator
9	3951682	285809		Cam-Agitator
10	3366877	80040		Dog-Agitator
11	3952374			Bearing, Driven Cam
12	21366			Nut, Spanner
13	8526016	W10389328		Clothes Container, Assembly
14	2219077			Clip, Pressure Switch Hose
15	8519788	387240		Ring, Balance
16	63849			Strain Relief, Power Cord

17	389140		Tub Block, Basket Drive
18	383727		Gasket, Centerpodt
19	3347780	353244	Hose, Pressure Switch
20	3951744		Agitator Assembly
22	3951608		Spacer, Thrust
23	3354733	W10074580	Cap, Barrier
24	3348855	W10072840	Fabric Softener
26	3949550		Washer

the laundry company®
the laundry company®
the laundry company®