Whirlpool LSQ9549LG3 02 - CONTROLS AND REAR PANEL PARTS

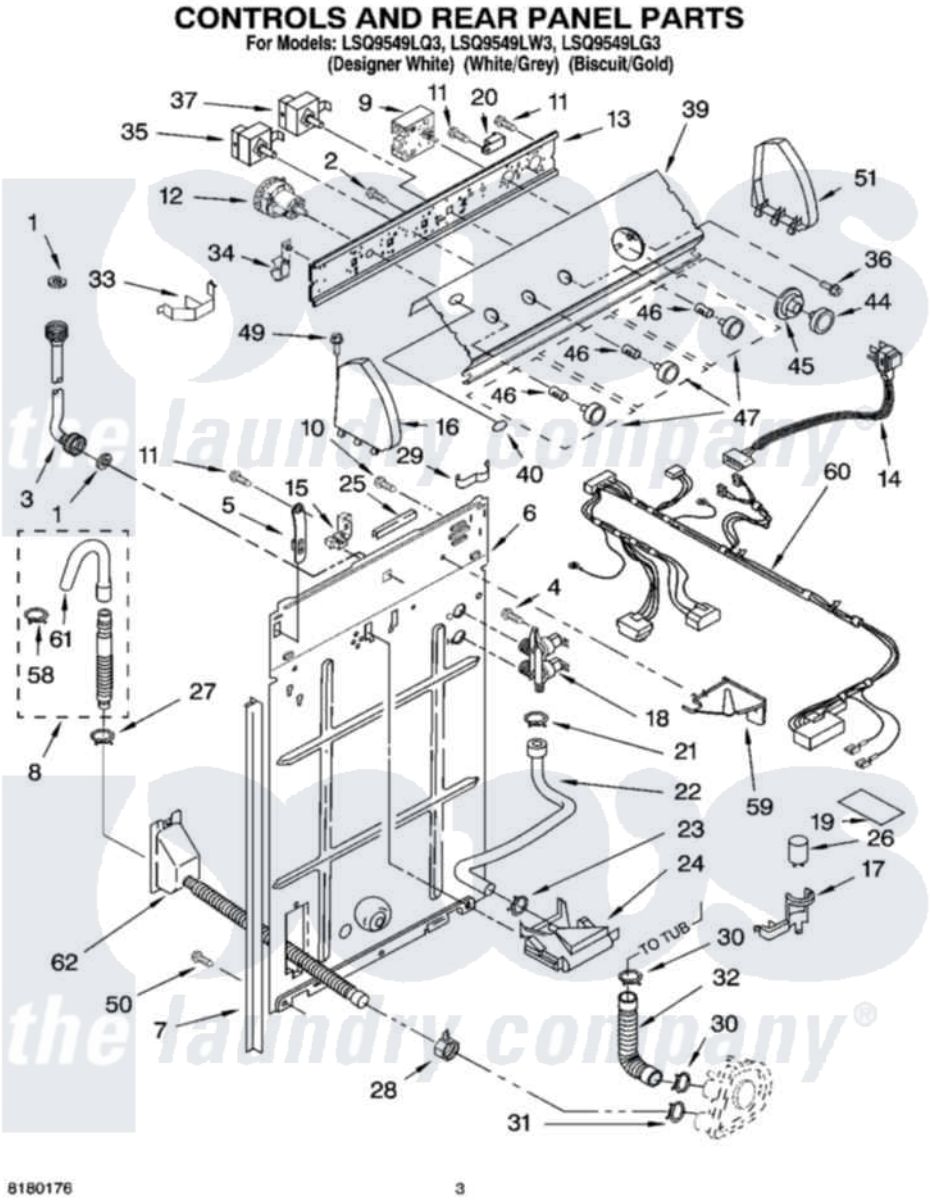

Whirlpool Residential Whirlpool LSQ9549LG3 Washer Parts Parts Diagram 02 - CONTROLS AND REAR PANEL PARTS
Click on the part number to view part

Item	Original Part Number	Replaced By	Status	Part Description
1	3976300	16123		Washer Inlet-Hose Miscellaneous Parts Must be Ordered Separately.
2	3400073			Screw, Ground
3	3949374	89503		Hose-Inlet
"	3949375	89503		Hose-Inlet
4	9740848			Screw, Mixing Valve Mounting
5	8318255	8568314		Strap, Console
6	3357978			Panel, Rear
7	62747			Pad, Rear Panel
8	3951609	285664		Hose
"	661577	285666		Hose
"	3357090	285702		Hose
9	8546165			Timer, Control
10	3351614			Screw, Gearcase Cover Mounting
11	90767			Screw, 8A X 3/8 HeX Washer Head Tapping

12	3366845	W10339326	Switch-WL
13	3948608		Bracket, Control
14	661661	285800	Cord-Power
15	3952821	285777	Relief-Str
16	8271365	279962	Endcap
"	8271368	279965	Endcap
17	8318201	8318046	Clip, Capacitor
18	3952164	285805	Valve-Inlet
19	3976286		Shield, Capacitor
20	694419		Mini-Buzzer
21	8533946	596669	Clamp, Manifold
22	8317974	8317926	Hose, Vacuum Break
23	9724996	596669	Clamp, Manifold
24	387606	3360977	Break-Vac
25	303294	3367669	Protector, Edge
26	661606	8572717	Capacitor, Motor Start
27	3366912	356138	Clamp, Hose
28	3976395		Restraint, Hose
29	3347812	8528351	Clip
30	3363366	616099	Clamp
31	8317496	285655	Clamp, Hose
32	3951449	285871	Hose
33	8055003		Clip, Harness And Pressure Switch
34	8317975		Restraint, Harness
35	661614		Switch, Water Temperature
36	3400064		Screw, Timer Mounting
37	8528333		Switch, Rotary
39	3955803		Panel, Console
"	3955804		Panel, Console
"	3955805		Panel, Console
40	3955775	8303811	Badge, Assembly
44	8274290	3364291	Knob, Timer
"	8538950		Knob, Timer
"	8538951		Knob, Timer
45	8271351	3957849	Dial, Timer
"	8538955		Dial, Timer
"	8538956		Dial, Timer
46	8536939		Clip, Knob
47	8271339	3957799	Knob, Control
"	8538957		Knob, Control
"	8538958		Knob, Control
49	388326		Screw, 8-18 X 1.25
50	62863	3390631	Screw, 10-16 X 3/8
51	8271359	279962	Endcap
"	8271362	279965	Endcap
58	3366913	3357331	Clamp, Drain
59	8539874		Shield, Suds
60	3956691		Harness, Wiring
61	3357027		Nozzle, Hose Drain
62	8317940	W10358149	Drain Hose Assembly

the laundry company®