Whirlpool LSQ9550PW3 03 - AGITATOR, BASKET AND TUB PARTS

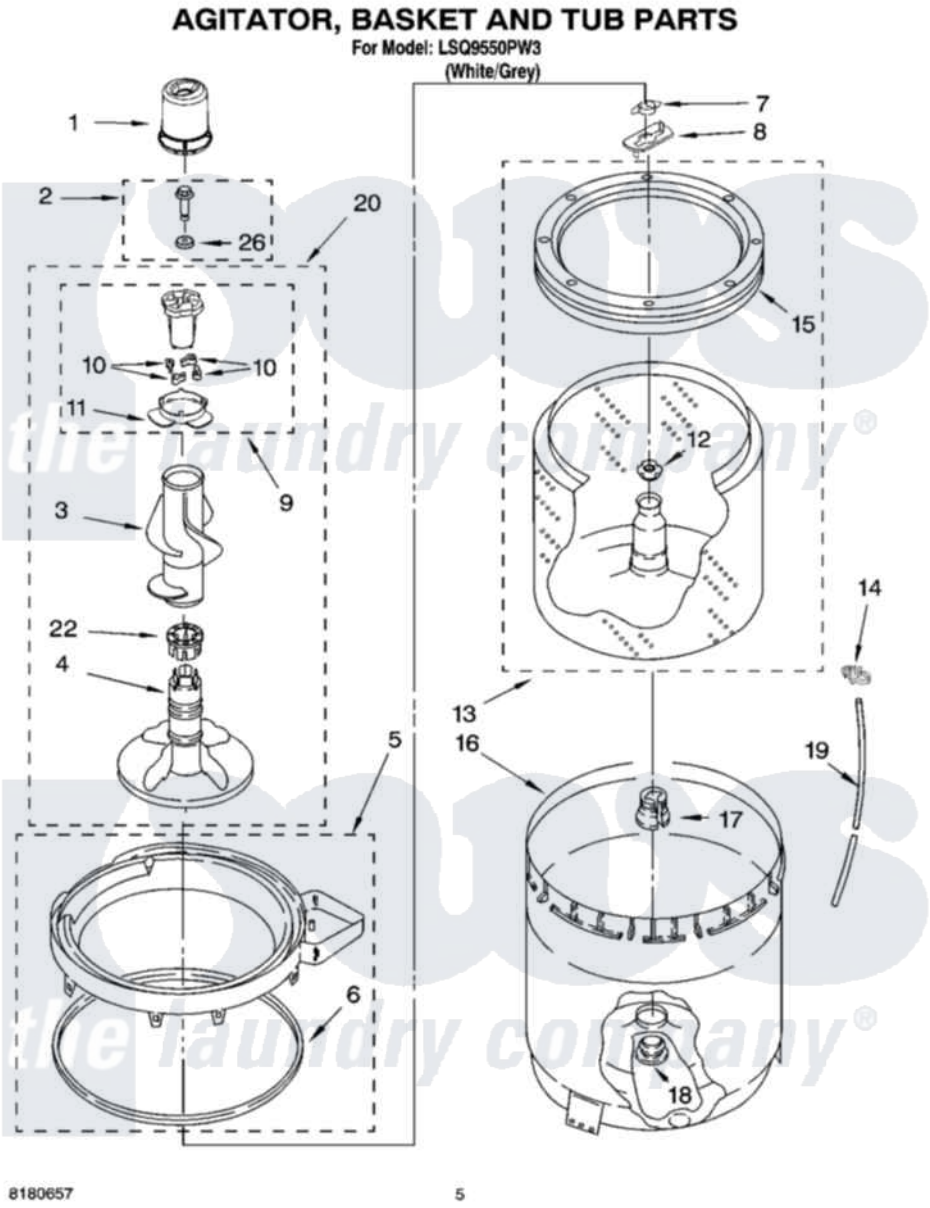

Whirlpool Residential Whirlpool LSQ9550PW3 Washer Parts Parts Diagram 03 - AGITATOR, BASKET AND TUB PARTS
Click on the part number to view part

Item	Original Part Number	Replaced By	Status	Part Description
1	8559760			Dispenser, Fabric Softener
2	358237			Screw And Washer
3	389141	3360824		Auger, Agitator
4	389386			Agitator
5	8528150	W10445870		Ring-Tub
6	3976308			Gasket, Tub Ring
7	3354845			Clip, Agitator
8	3355921	8543666		Washer, Agitator
9	3363662	285748		Cam-Agitator
10	3366877	80040		Dog-Agitator
11	3363661			Bearing, Driven Cam
12	21366			Nut, Spanner
13	8526016	W10389328		Clothes Container, Assembly
14	2219077			Clip, Pressure Switch Hose
15	8519788	387240		Ring, Balance
16	63849			Strain Relief, Power Cord

17	389140		Tub Block, Basket Drive
18	383727		Gasket, Centerpodt
19	3347780	353244	Hose, Pressure Switch
20	3347674	285727	Agitator
22	3350389	285587	Washer
26	3949550		Washer

the laundry company®
the laundry company®
the laundry company®