Whirlpool LSR5101LQ1 01 - TOP AND CABINET PARTS

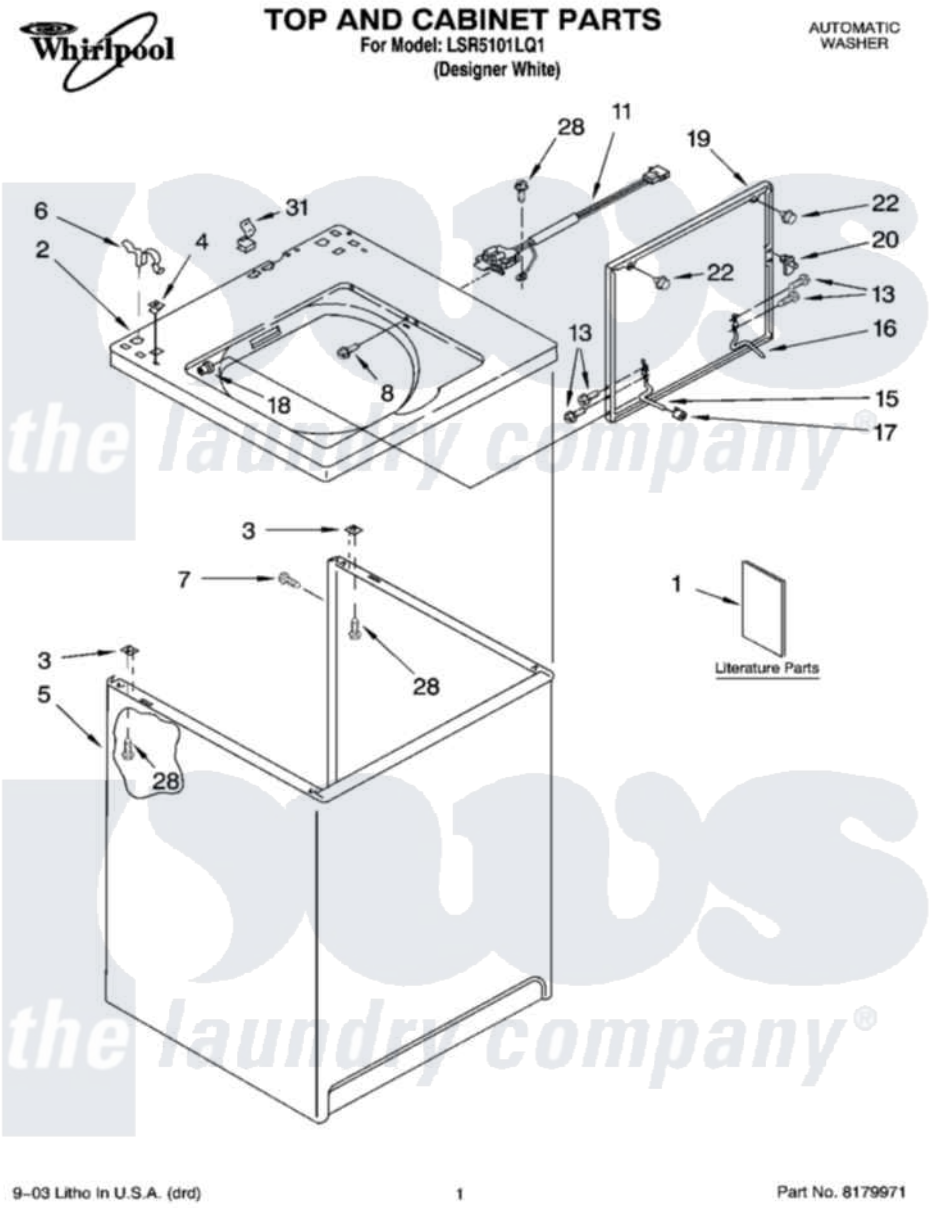

Whirlpool Residential Whirlpool LSR5101LQ1 Washer Parts Parts Diagram 01 - TOP AND CABINET PARTS
Click on the part number to view part

Item	Original Part Number	Replaced By	Status	Part Description
1	LIT3956025		Not Available	Literature Parts (Installation Instructions)
"	LIT3955901		Not Available	Literature Parts (Feature Sheet)
"	LIT3955869			Literature Parts
"	LIT3956327		Not Available	Literature Parts (Energy Guide)
"	LIT3955771		Not Available	Literature Parts (Wiring Diagram)
"	N/A		Not Available	Following May Be Purchased DO-IT-YOURSELF REPAIR MANUALS
"	LIT4313896	4313896		Do-It-Yourself Repair Manuals
2	8274315		Not Available	Top (White)
3	62750			Spacer, Cabinet To Top (4)
4	357213			Nut, Push-In
5	63424			Cabinet
6	62780			Clip, Top And Cabinet And Rear Panel
7	3357011	308685		Side Trim)

8	3356311		Screw And Washer, Lid Switch Shield
11	3949237	3949247	Switch-Lid
13	3351355	W10119828	Screw, Lid Hinge Mounting
15	54584		Hinge, Lid
16	91770		Hinge, Lid
17	19119		Bumper, Lid Hinge
18	21258		Bearing, Lid Hinge
19	3361411	W10193874	Lid
20	358684		Strike, Lid Switch
22	9724509		Bumper, Lid
28	3390631		Screw, 10-16 X 3/8
31	90016		Clip, Pressure Switch Hose

the laundry company®
the laundry company®
the laundry company®