Whirlpool LTE6234DT6 01 - WASHER/DRYER CONTROL PANEL PARTS

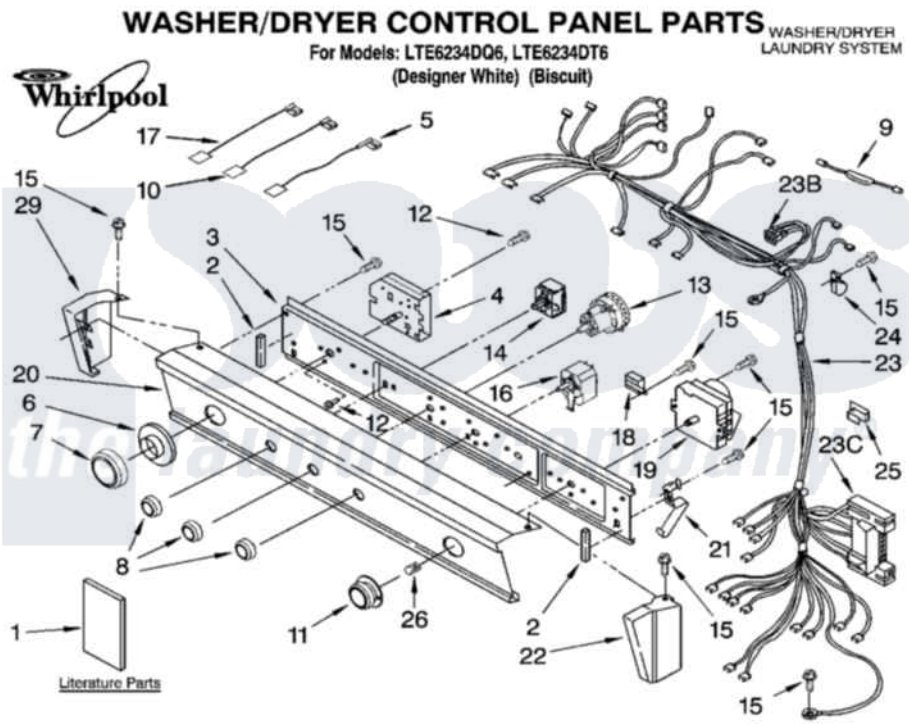

Whirlpool Residential Whirlpool LTE6234DT6 Washer/Dryer Parts Parts Diagram 01 - WASHER/DRYER CONTROL PANEL PARTS

Click on the part number to view part

Item	Original Part Number	Replaced By	Status	Part Description
1	BLANK		Not Available	LITERATURE PARTS
"	W10112997		Not Available	Installation Instructions (English)
"	3397634		Not Available	Installation Instructions (Arabic)
"	8578179		Not Available	Installation Instructions (English)
"	3405528		Not Available	Use & Care Guide (Arabic)
"	8542752		Not Available	Sheet, Cycle Feature
"	8546674		Not Available	Wiring Diagram
"	8576493		Not Available	Energy Guide
2	3390688			Spacer- Foam Pad
3	8528583			Bracket, Control
4	3948357			Timer, Washer
5	3401674			Wire, Jumper
6	3957845			Dial,
"	3957846			Dial,

7	3957825		Knob, Timer
"	3957826		Knob, Timer
8	3957796		Knob, Control
"	3957797		Knob, Push-To-Start
9	3401078	279872	Resistor
10	3401684		Jumper, Wire
11	3957750		Knob, Timer
"	3957751		Knob, Timer
12	3400064		Screw, Timer Mounting
13	8546175	W10311356	Switch-WL
14	3405157		Switch, Temperature
15	90767		Screw, 8A X 3/8 HeX Washer Head Tapping
16	3404233		Switch, Push-To-Start
17	3393810		Jumper Wire
18	694419		Mini-Buzzer
19	3976569		Timer, Dryer
20	3396689		Panel, Control
"	3406828		Panel, Control
21	3389453		Bracket, Hinge
22	3389456		End Cap
"	3389462		End Cap
23	8299835	8576535	Harns-Wire
"	2154470		Receptacle,
"	3395683		Receptacle, Multi-Terminal
24	3390604		Clamp, Harness
25	3390422	W10134185	Clip, Harness
26	688805		Clip, Spring Knob
29	3389464		End Cap
"	3389470		End Cap

the laundry company®