Whirlpool LTG5243DQ9 04 - DRYER BULKHEAD PARTS

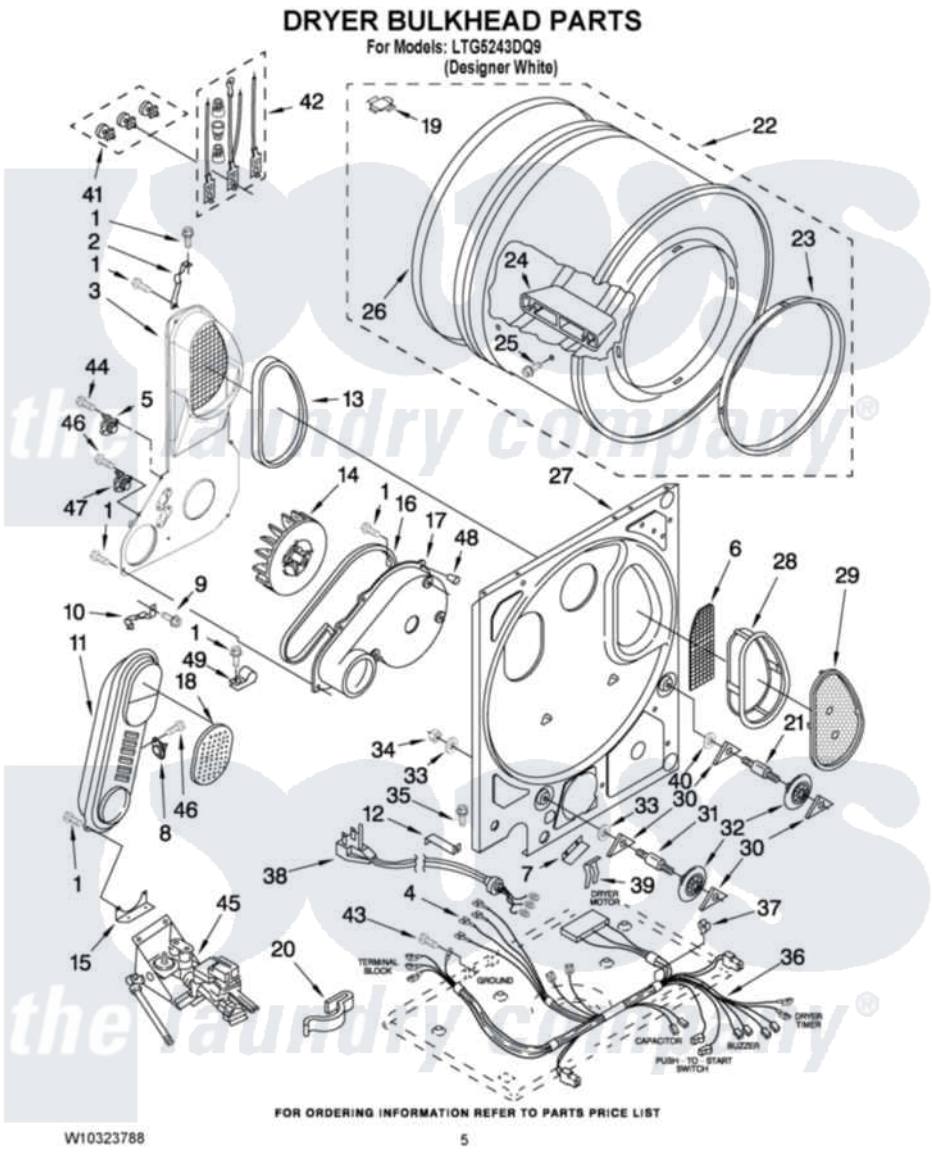

Whirlpool Residential Whirlpool LTG5243DQ9 Washer/Dryer Parts Parts Diagram 04 - DRYER BULKHEAD PARTS
Click on the part number to view part

Item	Original Part Number	Replaced By	Status	Part Description
1	343641	681414		Screw, 10AB X 1/2
2	3395396	345396		Clip, Air Duct To Bulkhead
3	8566187	8566186		Air Duct And Bracket
4	94614			Terminal
5	3398128			Thermostat, Internal Bias
6	348378			Screen, Back-Up
7	697571		Not Available	Guard, Sock
8	3403140			Thermostat, High-Limit 205F
9	489463			Screw, 8-18 X 1/16
10	3398161			CLIP
11	697269	280007		Box-Heater
12	3387208			Support, Corner Gas
13	339956			Seal, Air Duct To Bulkhead
14	696426			Wheel, Blower
15	347455			Support, Heater Box
16	8066094			Seal, Fan Scroll

17	696418			Fan Scroll
18	345335			Cover, Manifold
19	8066086			Plug, Drum Hole
20	3400935			Clip, Harness
21	3399507	W10359269		Shaft, Drum Roller Threads
22	695943	3391834		Drum
23	3394508			Ring, Bearing
24	685207			Baffle, Drum
25	W10219342			Screw, Baffle Mounting
26	345648	279735		Seal
27	697540			Bulkhead
28	8531964			Lint Screen
29	8531967			Cover, Lint Screen Outlet
30	690997			Washer, Thrust
31	3399506	W10359270		Shaft, Drum Roller Threads
32	3397590	349241T		Support
33	348197			Washer, Support
34	3359452			Nut, Lock
35	3390631			Screw, 10-16 X 3/8
36	8299829			Harness, Main Dryer Wiring
37	693141		Not Available	Clip, Wiring Harness (3)
38	W10239314			Cord, Power
39	694415			Clip, Strain Relief
40	3388703			Washer, Support
41	279393			Terminal Block Screw Kit
42	279318			Terminal Tinned And Brass Panel
43	697776	4331106		Screw, No.10-32 X 7/16
44	3390647	488729		Screw
45	3402856	W10492503		Burner-Gas
46	90767			Screw, 8A X 3/8 HeX Washer Head Tapping
47	8572767			Thermal Limiter 195 F
48	359702	W10491983		Tip-Tines
49	255563	488946		Clamp, Evaporator Tube

the laundry company®