# Whirlpool SAWX650MQ0 03 - AGITATOR, BASKET AND TUB PARTS

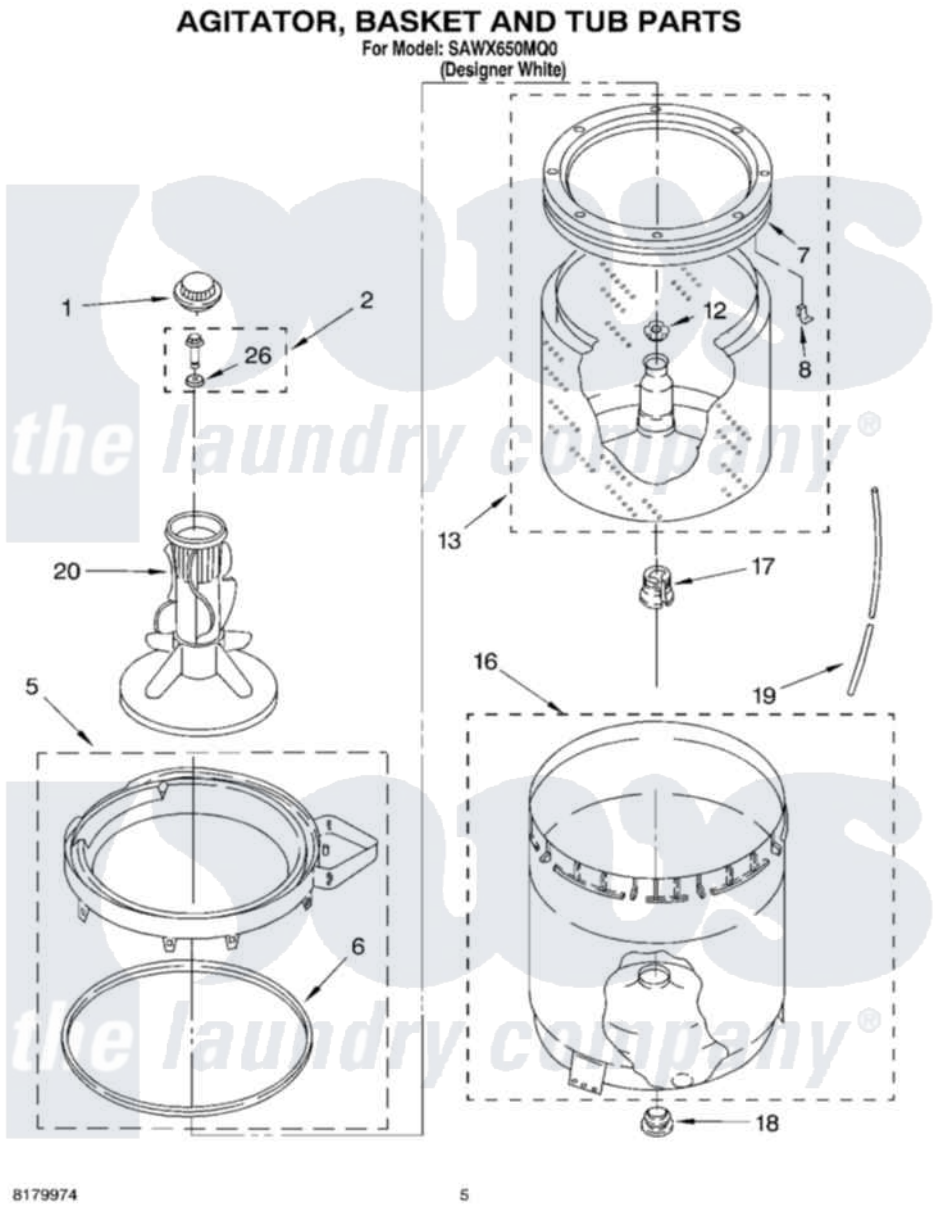


Whirlpool Residential Whirlpool SAWX650MQ0 Washer Parts Parts Diagram 03 - AGITATOR, BASKET AND TUB PARTS
Click on the part number to view part

| Item | Original Part Number | Replaced By | Status | Part Description |
|---|---|---|---|---|
| 1 | 3355758 | | | Cap, Agitator |
| 2 | 358237 | | | Screw And Washer |
| 5 | 3360611 | | | Tub Ring And Gasket Assembly |
| 6 | 3359586 | | | Gasket, Tub Ring |
| 7 | 387867 | 8519815 | | Clip, Balance Ring |
| 8 | 8519815 | | | Clip, Balance Ring |
| 12 | 21366 | | | Nut, Spanner |
| 13 | 8271646 | 3956207 | | Basket And Balance Ring |
| 16 | 63125 | | | Tub |
| 17 | 389140 | | | Tub Block, Basket Drive |
| 18 | 383727 | | | Gasket, Centerpodt |
| 19 | 3347780 | 353244 | | Hose, Pressure Switch |
| 20 | 63235 | | | Agitator Assembly |
| 26 | 3949550 | | | Washer |