Whirlpool WED6600VU0 03 - BULKHEAD PARTS, OPTIONAL PARTS (NOT INCLUDED)

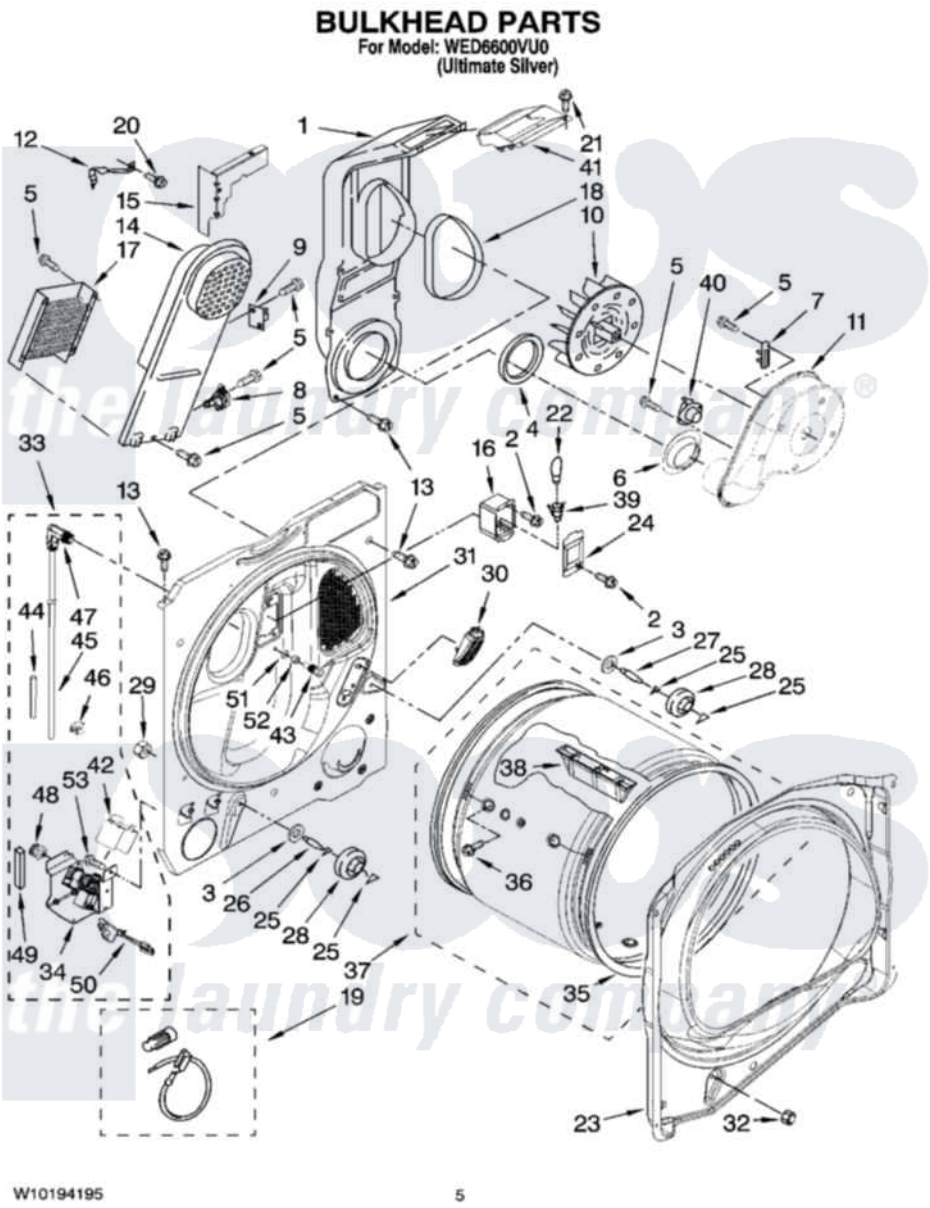

Whirlpool Residential Whirlpool WED6600VU0 Dryer Parts Parts Diagram 03 - BULKHEAD PARTS, OPTIONAL PARTS (NOT INCLUDED)
Click on the part number to view part

Item	Original Part Number	Replaced By	Status	Part Description
1	8544805			Lint Chute Assembly
2	487909	488729		Screw
3	3387459	W10080960		Washer, Support
4	347139			Seal, Lint Chute
5	90767			Screw, 8A X 3/8 HeX Washer Head Tapping
6	8573836			Shield, Exhaust
7	3392519			Thermal Limiter
8	8577891			Thermostat, Hi-Limit
9	W10169881			Kit, Thermal Cut-Off
10	694089			Wheel, Blower
11	8577230			Housing, Blower
12	8546149			Clip-Heater Box
13	343641	681414		Screw, 10AB X 1/2
14	8544801			Box, Heater

15	W10053480			Bracket, Lint Chute
16	3977373			Bracket, Drum Light
17	3403585	279838		Element
18	8544813			Seal, Lint Chute
19	279457			Wire Kit, Terminal
20	489463			Screw, 8-18 X 1/16
21	3196537	3196557		Panel, Manifold
22	3406124	22002263		Lamp
23	8558890			Bulkhead, Front
24	3402841	8532165		Lens, Drum Light
25	690997			Washer, Thrust
26	8575325	W10359272		Shaft, Roller Drum Threads
27	8575324	W10359271		Shaft, Drum Roller Threads
28	8536973	W10314173		Support
29	W10001120	W10080190		Nut, 3/8-16
30	8576468			Assembly, Sensor
31	W10131528			Bulkhead, Rear
32	3934666	W10080210		Nut, 3/8 X 16
33	W10153129			Valve And Hose Assembly Complete
34	W10146150			Valve-Inlet And Bracket Assembly
35	8557277	280140		Seal
36	W10109200			Screw, Baffle Mounting
37	8557270	8557272		Drum, Assembly
38	8565688			Baffle, Drum
39	W10168632			Socket, Assembly
40	8577274			Thermostat 295F
41	8544810			Collar, Lint Chute
42	W10160575			Cover, Myst Valve
43	W10044629			Nozzle And Screen Assembly
44	W10153865			Sleeve, Tube
45	W10131527	W10153864		Nozzle And Hose Assembly
46	W10044615			Clip, Push-To-Connect
47	W10153864			Nozzle And Hose Assembly
48	W10044605			Coupling, Hose
49	W10158778			Foam, Myst Bracket
50	W10160610			Harness-Water Inlet Valve
51	W10044579			Washer, Nozzle Blower Housing
52	W10044628			Brass, Nut 9/16 - 24 X 1/32
53	693995			Screw, Hex Head
	BLANK		Not Available	ACCESSORY PARTS
"	279948	4392065		Kit, Dryer Repair
"	W10071550	W10071550A		Dryer Rack
"	8522199			Accessory Parts
"	8544761	8544761A		Exten-Exht
"	49611			Kit, Side Venting
"	72017			Paint, Touch-Up
"	350930			Paint, Pressurized Spray B
"	350938			Paint, Pressurized Spray B
"	799344			Paint, Touch-Up)
"	BLANK		Not Available	Miscellaneous Parts Bag
"	W10044609	W10044609A		Hose-Kit

the laundry company®

"	76314		Hose, Inlet 6 Ft. Hose With Elbow
"	W10044603		Connector, Hose ``Y``
"	3976300	16123	Washer Inlet-Hose Miscellaneous Parts Must be Ordered Separately.
"	W10044604	49586	Mixer

the laundry company®
the laundry company®
the laundry company®