Whirlpool WED9550WL2 04 - DOOR PARTS

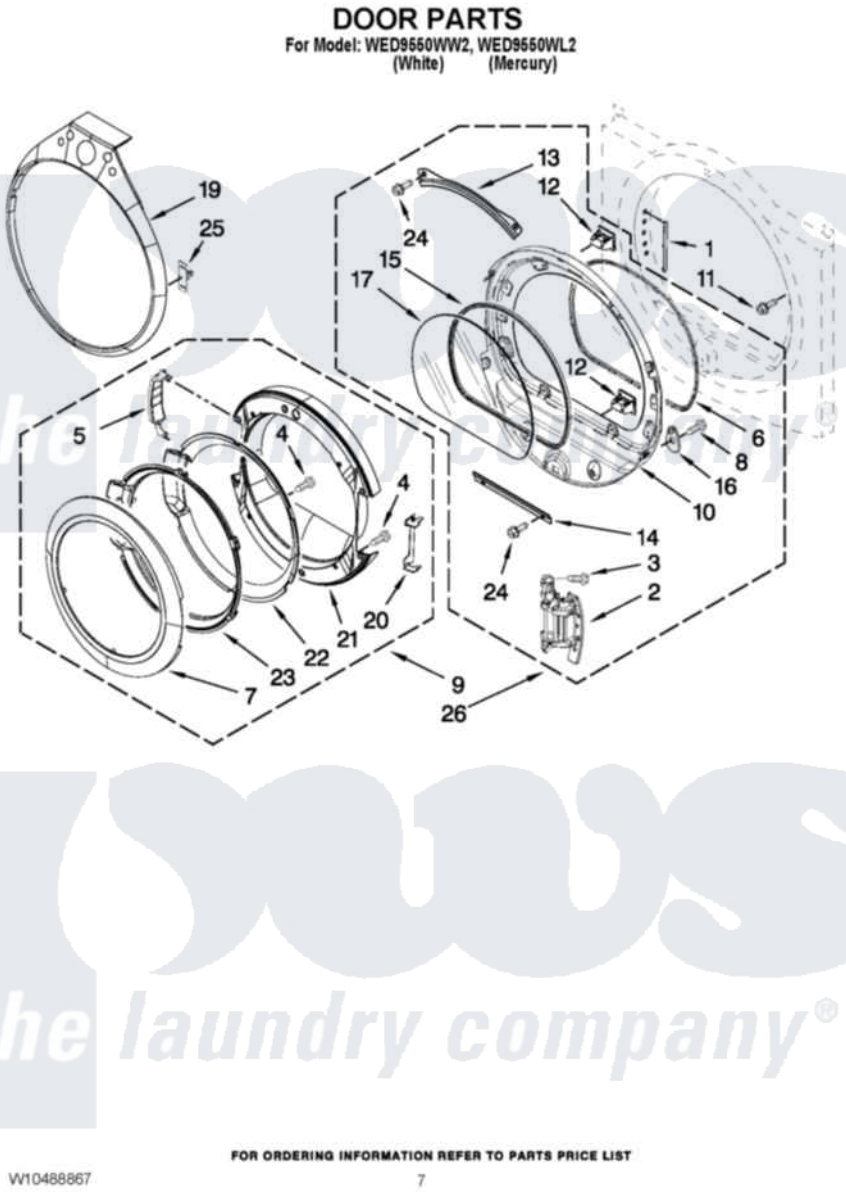

Whirlpool Residential Whirlpool WED9550WL2 Dryer Parts Parts Diagram 04 - DOOR PARTS
Click on the part number to view part

Item	Original Part Number	Replaced By	Status	Part Description
1	W10085210			Label-Hinge Hole Cover Front Panel
2	W10310366			Door Hinge Assembly
3	W10159996			Screw, 10-24 X 25/64
4	9742177			Screw, 8-18 X .625
5	W10180119			Cover-Hinge, Stationary Cover Hinge
NI	N/P		Not Available	(FOLLOWING PARTS NOT INCLUDED)
"	W10181197			Cover Hinge
6	W10139457			Seal-Door Handle, Ring Door
7	8579502			Handle, Door
8	3393008	308685		Side Trim)
9	W10180115			Door Assembly
10	8578229			Door Assembly
11	355515			Screw, 8-18 X 11/16
12	690081	279570		Latch

13	8519356		Retainer-Window
14	8519354		Retainer-Window
15	8579662		Gasket, Window
16	W10048910		Screw-Plug
17	8566254		Glass-Window
19	W10246600		Tear-Drop Trim And Clip Assembly
"	W10249765		Tear-Drop Trim And Clip Assembly
20	W10180120		Shield, Door
21	W10180118		Door, Intermediate
22	W10180117		Door Mask
23	8578155		Door Screen
24	3393258	3373329D	Screw
25	W10129065		Trim-Clip Metal
26	8577819		Door Assembly

the laundry company®
the laundry company®
the laundry company®