Whirlpool WFW9150WW02 01 - TOP AND CABINET PARTS

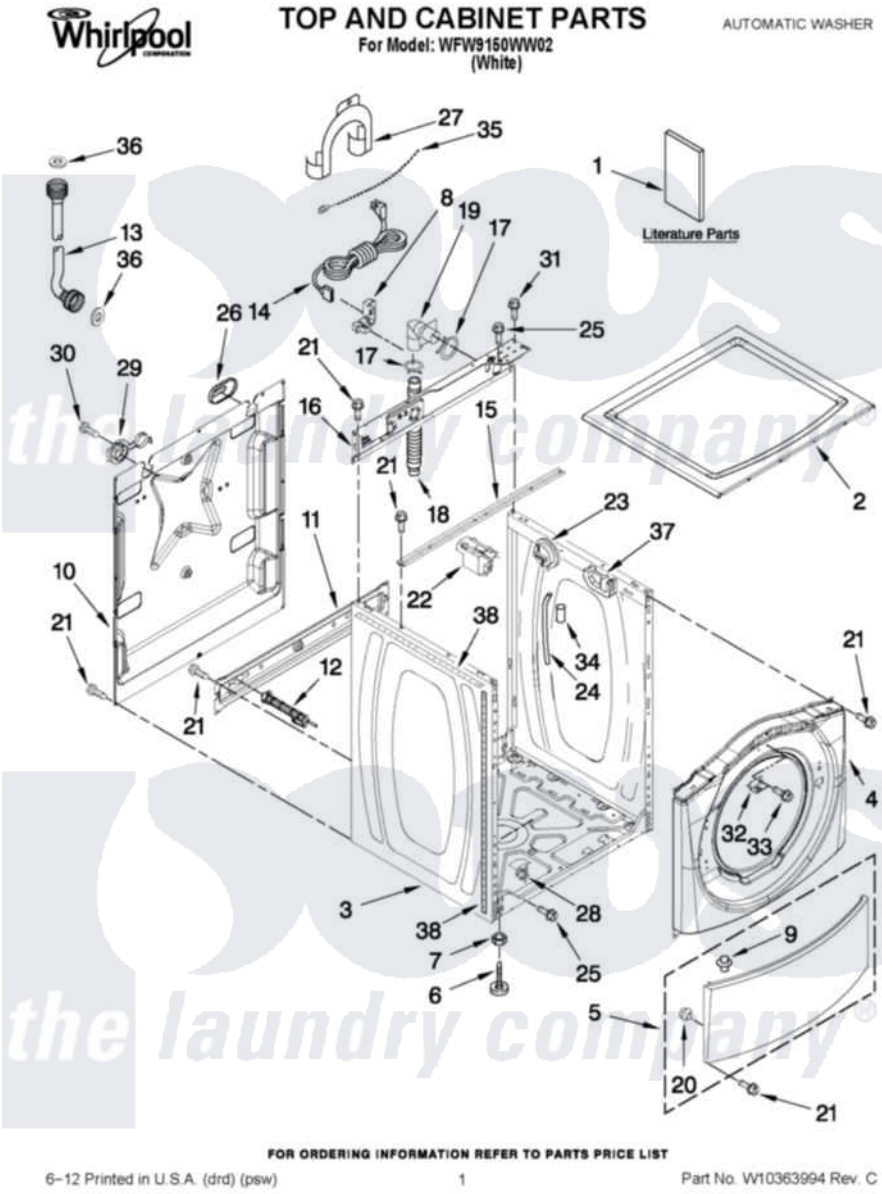

Whirlpool Residential Whirlpool WFW9150WW02 Washer Parts Parts Diagram 01 - TOP AND CABINET PARTS
Click on the part number to view part

Item	Original Part Number	Replaced By	Status	Part Description
1	W10252714		Not Available	USE & CARE GUIDE
"	W10385295		Not Available	TECH SHEET
"	W10252712		Not Available	ENERGY GUIDE
2	W10303994			Top
3	W10245758	W10410294		Cabinet
4	W10255250	8540746		Panel
5	8540813	8540664		Toe Panel
6	W10245373			Foot, Leveling
7	3359452			Nut, Lock
8	W10110676	8182635		Strain Relief
9	8518891			Rivet
10	W10258341			Panel, Rear
11	W10189657			Brace, Transport
12	W10251449	W10285622		Bolt
13	W10194208	89503		Hose-Inlet
"	8571378	89503		Hose-Inlet

14	W10205500	W10205499	Cord, Power
15	8540721		Brace, Top
16	W10299495		Brace, Rear
17	356138		Clamp, Hose
18	W10281257	8181737	Hose, Drain
19	W10003260	8181738	Connector, Hose Outlet
20	238614		Bumper And Isolation
21	W10015090	489442	Screw 3 2217757 Roller, Front
22	W10339736		Filter, Interference
23	W10239066		Switch, Pressure
24	8540294		Hose, Pressure Switch
25	8540479		Screw, Grounding
26	8540268		Cover, Transport
27	8540021	W10280024	U-Bend, Drain Hose
28	W10085220		Microswitch
29	8540728	8182699	Grommet, Cord Support
30	8540727	8182201	Screw, 3 X 8 mm
31	8540329		Screw, 8-18 X 7/16
32	8540669		Bracket, Console Retainer
33	8533954	98006631	Screw
34	2161302	2162499	Sleeve, Suction Line
35	3347868	W10339879	Tie, Cable
36	3976300	16123	Washer Inlet-Hose Miscellaneous Parts Must be Ordered Separately.
37	8540644		Bracket-Suspension Spring
38	8318396		Foam-Seal

the laundry company®