Whirlpool WFW9630YW00 02 - DOOR AND LATCH PARTS

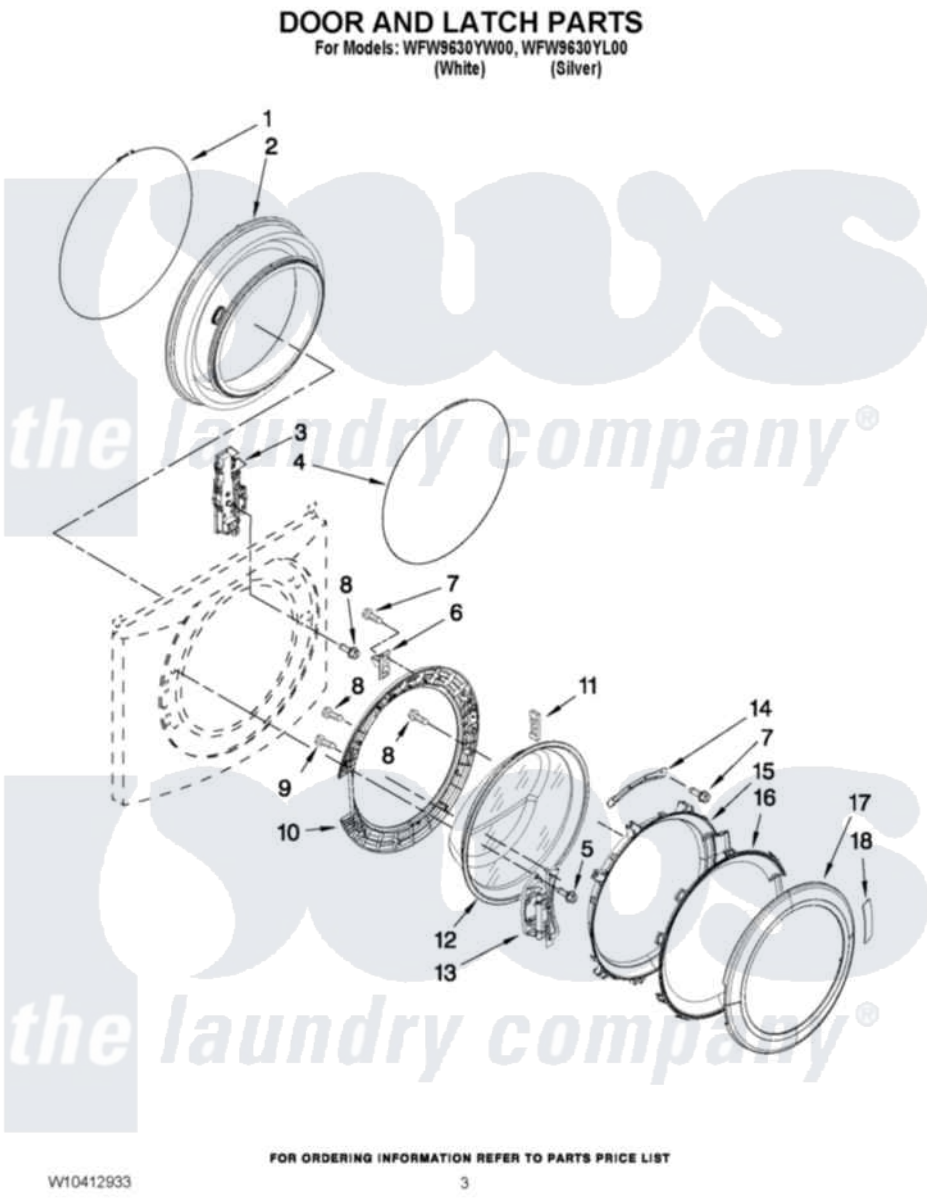

Whirlpool Residential Whirlpool WFW9630YW00 Washer Parts Parts Diagram 02 - DOOR AND LATCH PARTS
Click on the part number to view part

Item	Original Part Number	Replaced By	Status	Part Description
1	8182210			Clamp, Bellow
2	8182119			Bellow
3	8183270			Lock, Door
4	8182211			Clamp, Bellow To Front Panel
5	W10313165			Screw
6	W10217552			Hook, Door
7	8181758	8182214		Screw
8	8181661			Screw, Actuator
9	8181660			Screw
10	8183195			Frame, Door Back Support
11	W10128586			Clamp, Glass Support
12	8181655			Glass, Door
13	8183202			Hinge, Door
14	W10295703			Clamp, Glass
15	8183256			Frame, Door Front Support
16	W10248071	W10153278		Screen, Door

17	W10248123	W10193430	Trim Ring, Outer Door
18	W10121607		Pad, Door Handle