Whirlpool WFW9750WL00 04 - DISPENSER PARTS

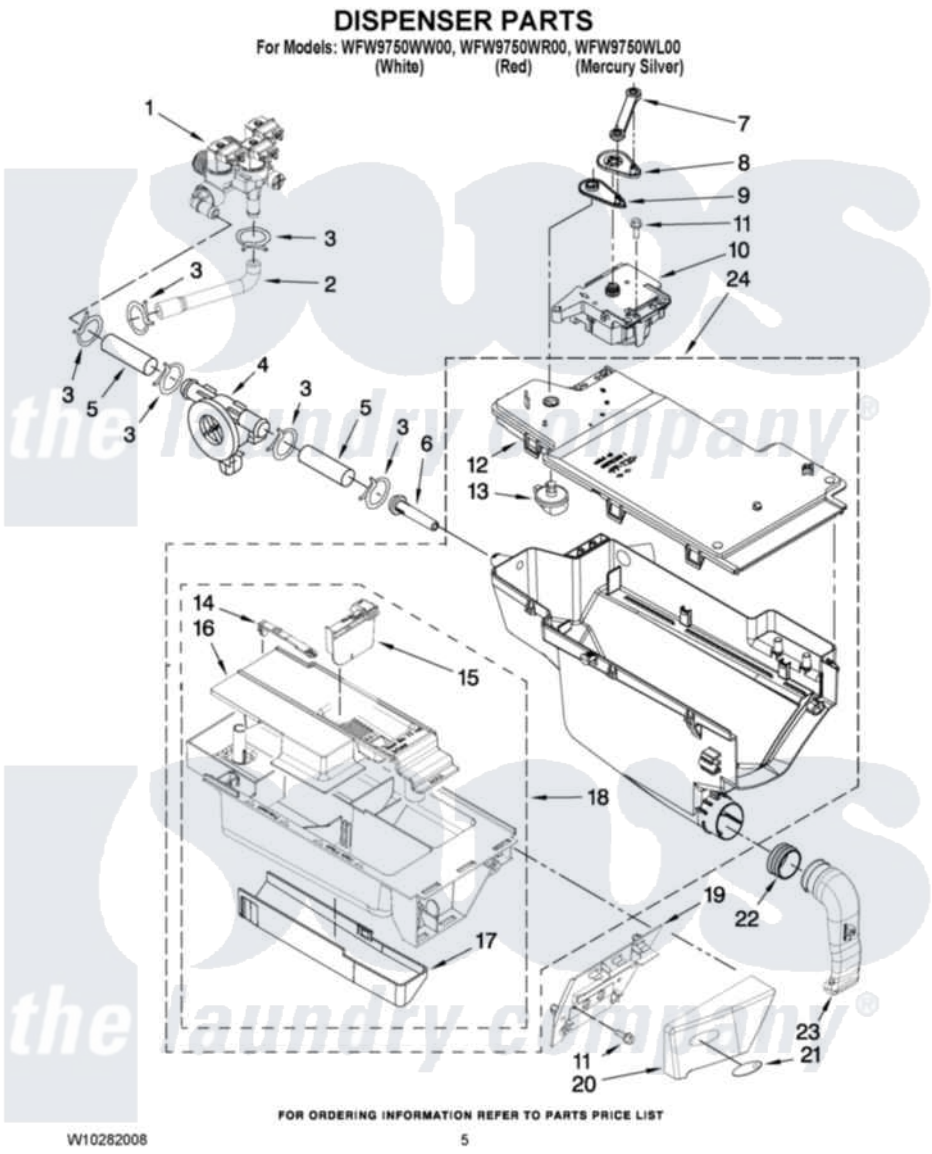

Whirlpool Residential Whirlpool WFW9750WL00 Washer Parts Parts Diagram 04 - DISPENSER PARTS
Click on the part number to view part

Item	Original Part Number	Replaced By	Status	Part Description
1	W10247306			Valve, Inlet
2	W10247308			Hose, Inlet Valve To Vent Pipe
3	8181751	489503		Clamp
4	8181696	W10110225		Flowmeter
5	W10275565			Hose, Inlet Valve To Flowmeter
6	8183181			Nozzle, Inlet
7	8183183			Lever, Water Distribution
8	8183184			Cam, Actuator
9	W10161052			Lever, Water Distribution
10	W10283468	W10352973		Actuator
11	8181661			Screw, Actuator
12	W10164400			Plate, Distribution
13	8181712			Nozzle, Distribution
14	8181721			Hook, Drawer
15	W10121596			Separator, With Selection Slider

16	W10157775		Syphon, Bleach/Softener
17	8183179		Cover, Detergent Drawer
18	W10157760		Drawer, Detergent
19	W10156617		Bracket, Handle Fixation
20	W10283376	W10283453	Handle
"	W10283426	W10283455	Handle
"	W10283428	W10283456	Handle
21	8183253		Medallion
22	8181747		Seal
23	8181718		Tube, Dispenser To Bellow
24	W10157759		Dispenser, Complete

the laundry company®
the laundry company®
the laundry company®