Whirlpool WFW9750WR02 01 - TOP AND CABINET PARTS

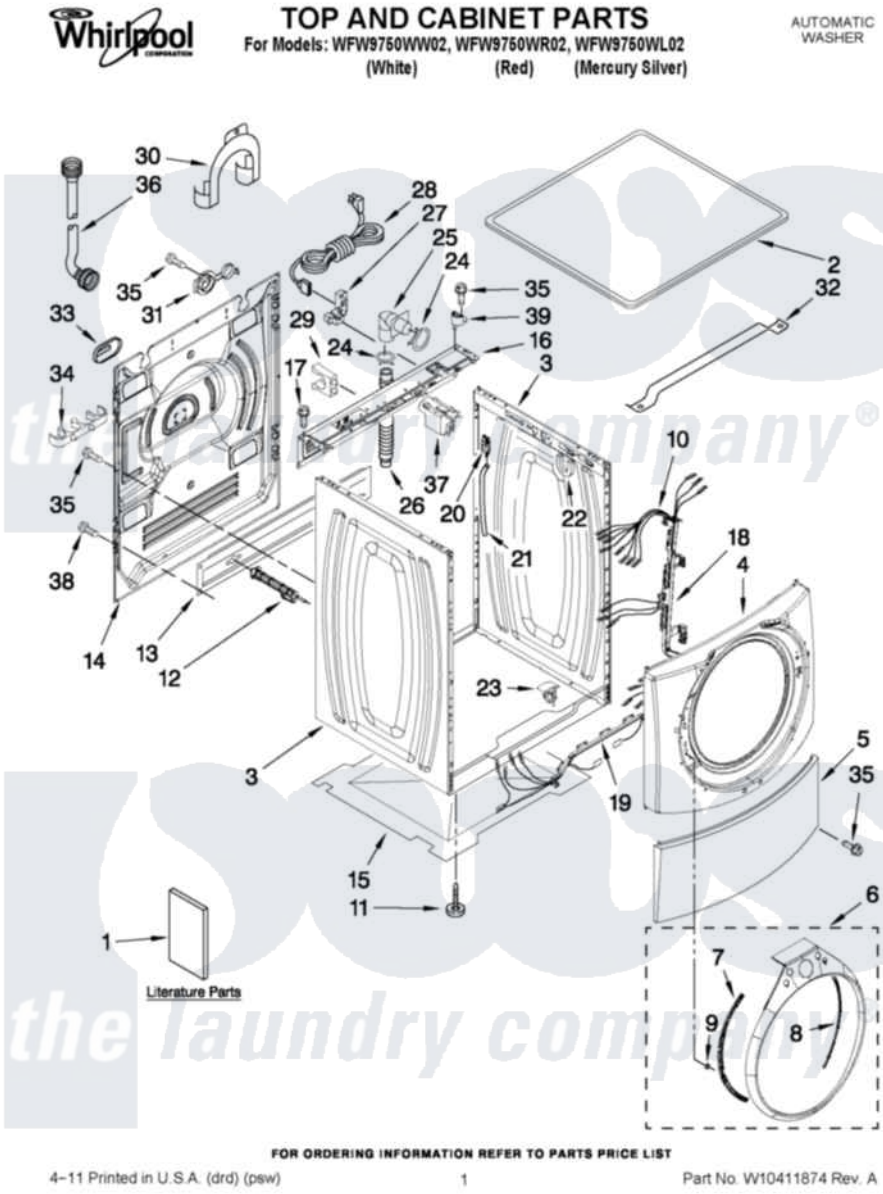

Whirlpool Residential Whirlpool WFW9750WR02 Washer Parts Parts Diagram 01 - TOP AND CABINET PARTS
Click on the part number to view part

Item	Original Part Number	Replaced By	Status	Part Description
1	W10296132		Not Available	USE & CARE GUIDE
"	W10250503		Not Available	Tech Sheet
"	W10388150		Not Available	ENERGY GUIDE
2	8181799	8181641		Top
"	W10289411			Top
"	W10289419			Top
3	W10288155			Cabinet
"	W10288157			Cabinet
"	W10288158			Cabinet
4	8183151	W10015590		Panel
"	W10289418			Panel, Front
"	W10289421			Panel, Front
5	8181643			Toe Panel
"	W10289410			Toe Panel
"	W10289422			Toe Panel
6	W10283373			Trim Ring, Teardrop Assembly

"	W10283374		Trim Ring, Teardrop Assembly
"	W10283375		Trim Ring, Teardrop Assembly
7	8183208		Bracket, Trim Fixation
8	8183209		Bracket, Trim Fixation
9	8183210		Clip, Trim
10	W10250577		Harness, Wiring
11	8181636		Foot, Leveling
12	W10283353	W10289554A	Bolt
"	W10283354	W10289554A	Bolt
13	8182661	W10003040	Brace, Transport
14	W10242507		Panel, Rear
15	8181635		Pan, Bottom
16	W10289389		Brace, Rear
17	8181756	488729	Screw
18	W10121609		Channel, Harness
19	W10121610		Channel, Harness
20	W10249845		Switch, Analog Pressure Sensor
21	8181739	W10004260	Hose, Pressure Switch
22	8181763		Bracket, Spring
23	W10189678	W10085220	Microswitch
24	8181752	3367052	Clamp, Hose
25	8181738		Connector, Hose Outlet
26	8181737		Hose, Drain
27	8181690	8182635	Strain Relief
28	8183009		Cord, Power
29	8182702		Clip, Outer Hose Holder
30	8181768	W10280024	U-Bend, Drain Hose
31	8182699		Grommet, Cord Support
32	8181632		Brace, Top
33	8182700	8540268	Cover, Transport
34	8182701		Clip, Outer Hose Holder
35	8181828	488729	Screw
36	8182795	89503	Hose-Inlet
"	8182792	89503	Hose-Inlet
37	W10326464		Filter, Interference
38	W10157885		Screw, 4.2 X 14
39	W10138249		Spacer, Top

the laundry company®