Whirlpool WFW97HEXW1 05 - TUB AND BASKET PARTS

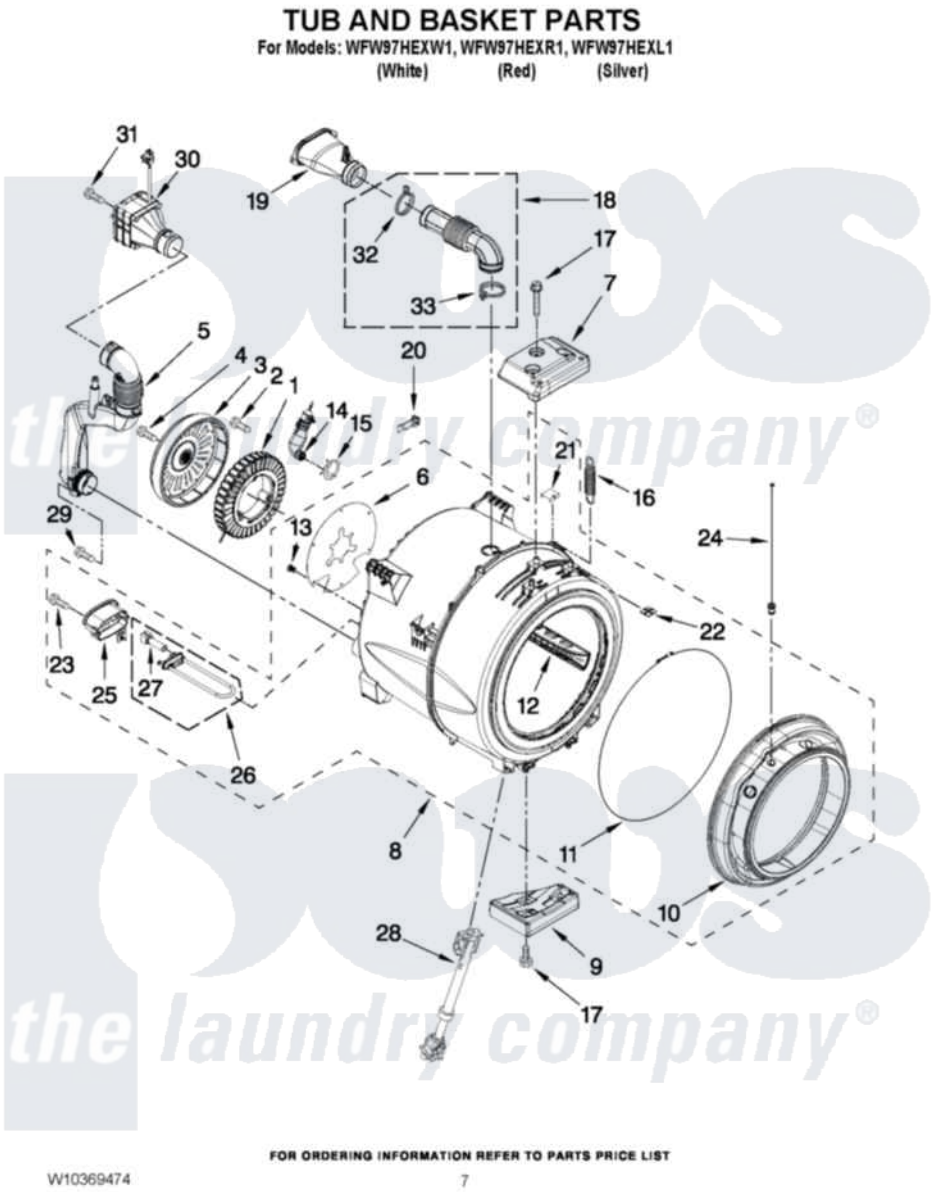

Whirlpool Residential Whirlpool WFW97HEXW1 Washer Parts Parts Diagram 05 - TUB AND BASKET PARTS
Click on the part number to view part

Item	Original Part Number	Replaced By	Status	Part Description
1	W10213978	W10365754		Stator
2	W10253476			Screw, Stator Mounting
3	W10213980	W10365755		Rotor
4	W10253477			Screw, Rotor Mounting
5	W10261582			Pipe, Ventilation Assembly
6	W10267637			Shield, Motor
7	W10253014			Counterweight, Top
8	W10355147	W10409998		Tub-Outer
9	W10237535			Counterweight, Bottom
10	W10237499			Bellow
11	W10237502			Retainer, Bellow To Tub
12	W10292810			Baffle, Tub
13	W10273613			Retalner, Push In
14	W10260500			Airtrap Assembly
15	371499			Clamp, Hose
16	W10249487	W10365757		Spring

17	W10261496		Screw, Counterweight
18	W10352811		Vent-Hose Coupling Assembly
19	W10352818		Vent Tube And Cover
20	W10316388		Clip, Harness Diverter
21	8540092		Clamp, Tub
22	8540072	8182512	Nut, Push-In
23	9740848		Screw, Mixing Valve Mounting
24	W10272847		Light, Led Assembly
25	W10318155		Shield, Heater
26	W10253993	8182666	Element, Heating
27	8181705		Ntc
28	W10261492		Shock Absorber
29	W10306501		Screw, M4.1-1.8 X 16.5C
30	W10261587		Fan, Ventilation Assembly
31	W10305097		Screw, M4.1-1.8 X 57
32	W10273034		Clamp, Vent Hose
33	W10353599		Clamp, Hose

the laundry company®

the laundry company®