Whirlpool WGD9500TW4 03 - BULKHEAD PARTS

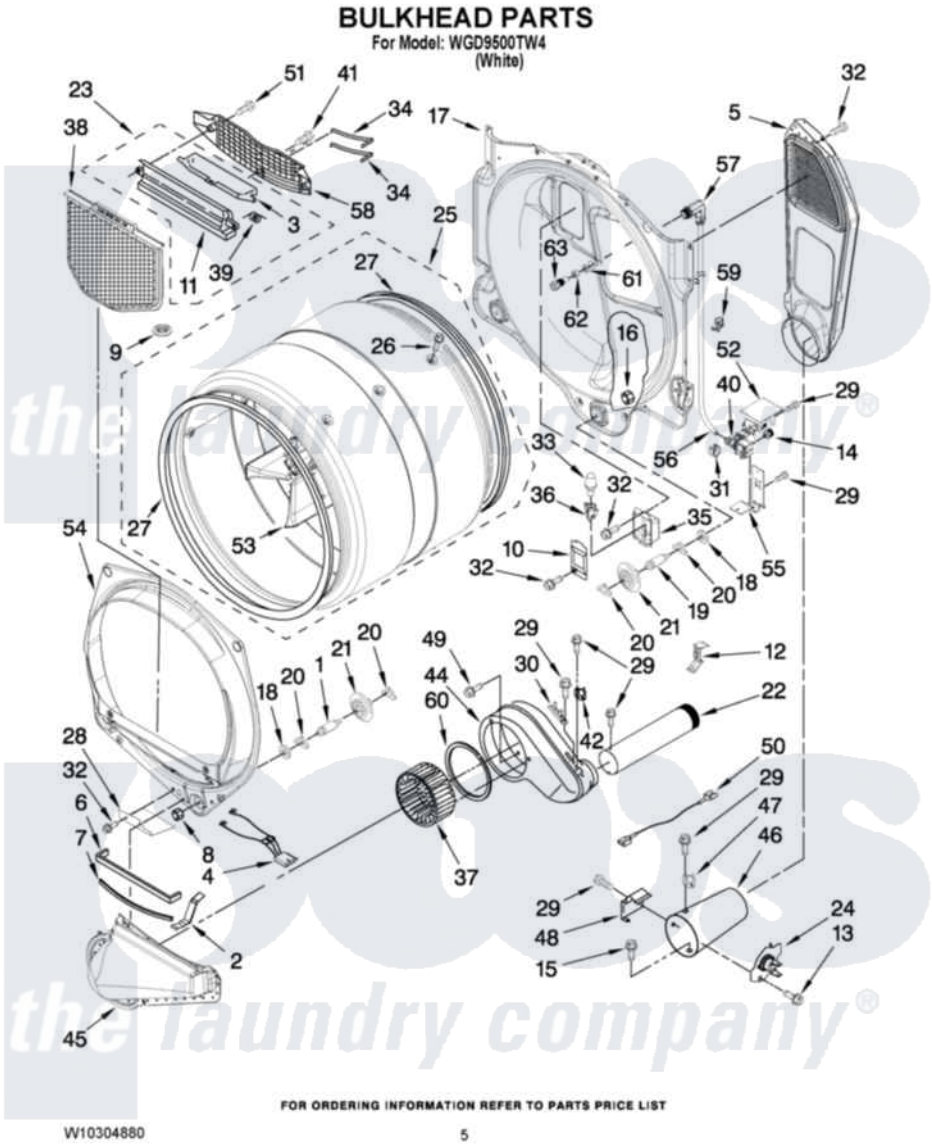

Whirlpool Residential Whirlpool WGD9500TW4 Dryer Parts Parts Diagram 03 - BULKHEAD PARTS
Click on the part number to view part

Item	Original Part Number	Replaced By	Status	Part Description
1	8575324	W10359271		Shaft, Drum Roller Threads
2	8066208			Clip-Exhaust
3	W10153413			Door, Lint Screen
4	3406653			Harness, Sensor
5	3394346			Air Duct Assembly
6	697813			Seal, Outlet Housing
7	697814	697813		Seal, Outlet Housing
8	3934666	W10080210		Nut, 3/8 X 16
9	W10128544			Housing-Outlet
10	3402841	8532165		Lens, Drum Light
11	W10153414			Outlet, Housing Assembly
12	8572105			Retainer, Toe Panel
13	8533971	90767		Screw, 8A X 3/8 HeX Washer Head Tapping
14	W10044605			Coupling, Hose
15	693995			Screw, Hex Head
16	W10001120	W10080190		Nut, 3/8-16

17	W10133857		Bulkhead, Rear
18	3387459	W10080960	Washer, Support
19	8575325	W10359272	Shaft, Roller Drum Threads
20	690997		Washer, Thrust
21	8536973	W10314173	Support
22	8563745	279936	Kit-Exhst
23	W10153423		Outlet Grille, Housing Assembly
24	8573713		Thermal-Cutoff
25	W10181466		Complete Drum Assembly
26	W10219342		Screw, Baffle Mounting
27	W10166807	280114	Seal
28	W10128629		Shield, Blower Housing
29	90767		Screw, 8A X 3/8 HeX Washer Head Tapping
30	3392519		Thermal Limiter
31	W10044615		Clip, Push-To-Connect
32	3390647	488729	Screw
33	3406124	22002263	Lamp
34	3387223		Electrode, Sensor
35	8578825		Bracket, Drum Light
36	W10214261		Socket, Drum Light Assembly
37	697772		Wheel, Blower
38	W10049370	W10120998	Screen
39	3394986		Spring, Lint Screen Door
40	W10044596	W10044608	Valve
41	695240	488729	Screw
42	8577274		Thermostat 295F
44	8544362	W10119255	Housing, Blower
45	8066168	W10128606	Duct-Lint
46	8573824		Funnel, Burner
47	3391912		Thermostat, High-Limit 255 F
48	338906		Radiant, Sensor
49	489463		Screw, 8-18 X 1/16
50	3401710		Jumper, Tco High Limit
51	3387230		Screw, 10-16 X 13/16
52	W10184825		Cover, Inlet Valve
53	697693	W10113136	Baffle, Drum
54	W10252304		Bulkhead, Front
55	W10044597		Bracket-Valve
56	W10044598	W10179730	Nozzle And Hose Assembly
57	W10277503		Nozzle And Hose Assembly
58	W10153412		Grille, Outlet
59	3391018		Tie Cable
60	697770		Seal, Cover Plate Blower Housing
61	W10044579		Washer, Nozzle Blower Housing
62	W10044628		Brass, Nut 9/16 - 24 X 1/32
63	W10044629		Nozzle And Screen Assembly

the laundry company®