Whirlpool WGD95HEXR1 03 - BULKHEAD PARTS

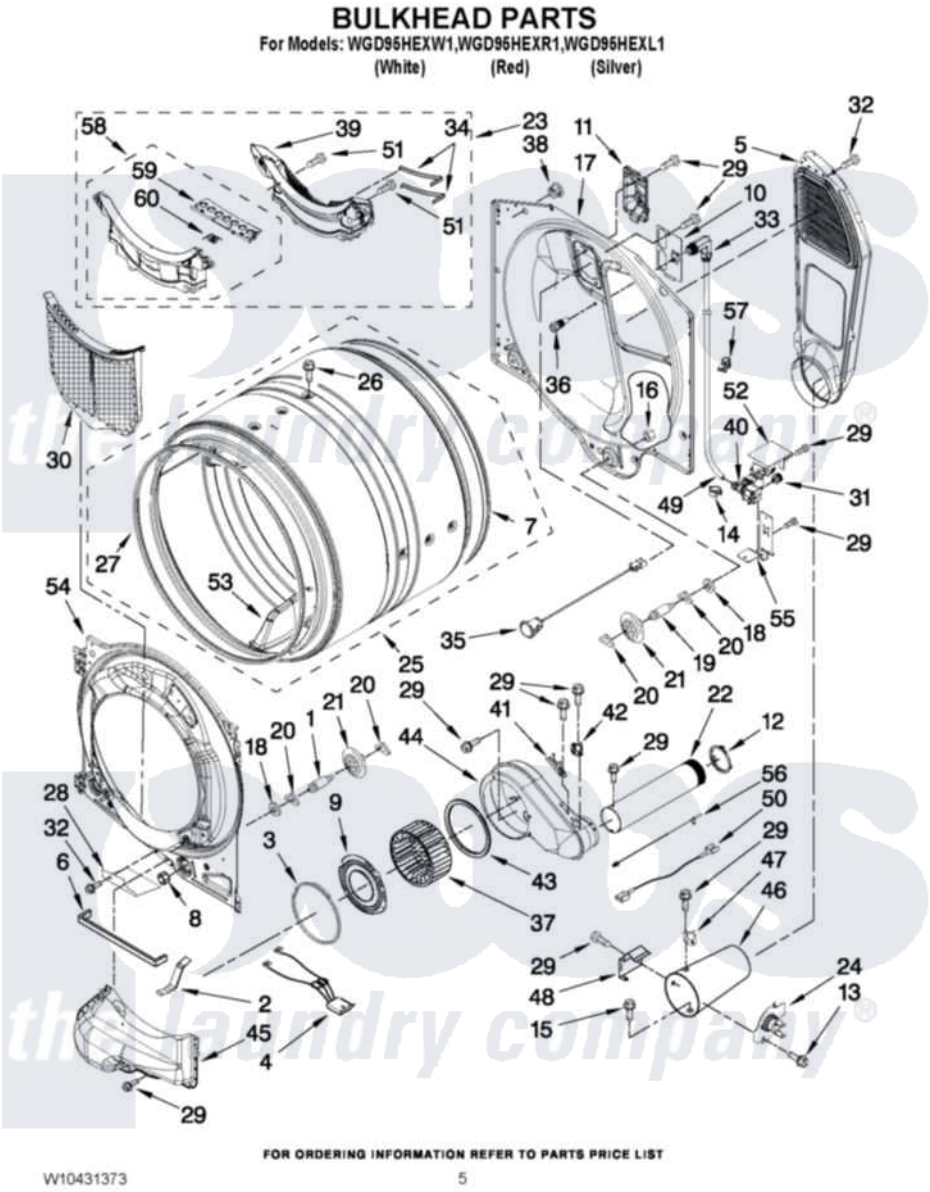

Whirlpool Residential Whirlpool WGD95HEXR1 Dryer Parts Parts Diagram 03 - BULKHEAD PARTS
Click on the part number to view part

Item	Original Part Number	Replaced By	Status	Part Description
1	W10359271			Shaft, Drum Roller Threads
2	W10306123			Clip, Lint Duct
3	W10211899			Seal, Collar Blower Housing
4	W10298258			Harness, Sensor
5	W10295533			Air Duct Assembly
6	W10211950			Seal, Outlet Housing
7	697694	280114		Seal
8	3934666	W10080210		Nut, 3/8 X 16
9	W10211901			Collar Assembly
10	W10208422			Rear Deflector
11	W10249422			Nozzle, Bracket Rear
12	W10344699			Collar, Duct
13	693995			Screw, Hex Head
14	W10044599			Clip, Push-To-Connect
15	693995			Screw, Hex Head
16	W10001120	W10080190		Nut, 3/8-16

17	W10211946		Bulkhead, Rear
18	3387459	W10080960	Washer, Support
19	W10359272		Shaft, Roller Drum Threads
20	690997		Washer, Thrust
21	W10314171		Roller, Support Assembly
22	W10342188		Exhaust Pipe
23	W10219012		Outlet, Grille And Housing Assembly
24	8573713		Thermal-Cutoff
25	W10280779		Drum Assembly
26	W10219342		Screw, Baffle Mounting
27	W10273050		Seal, Drum Front
28	W10128629		Shield, Blower Housing
29	90767		Screw, 8A X 3/8 HeX Washer Head Tapping
30	W10370972		Lint, Screen
31	W10044605		Coupling, Hose
32	3390647	488729	Screw
33	W10347739		Nozzle And Hose Assembly
34	3387223		Electrode, Sensor
35	W10236079		Drum Light Assembly-Led
36	W10277503		Nozzle And Hose Assembly
37	W10211915		Wheel, Blower
38	8529007		Plug, Rear Bulkhead
39	W10211903		Outlet Grill And Housing Assembly
40	W10346403		Valve, Water Inlet
41	3392519		Thermal Limiter
42	8577274		Thermostat 295F
43	697770		Seal, Cover Plate Blower Housing
44	W10211911		Housing, Blower
45	W10211896		Lint Duct Assembly
46	8573824		Funnel, Burner
47	3391912		Thermostat, High-Limit 255 F
48	338906		Radiant, Sensor
49	W10348621	W10347739	Nozzle And Hose Assembly
50	3401710		Jumper, Tco High Limit
51	3387230		Screw, 10-16 X 13/16
52	W10184825		Cover, Inlet Valve
53	W10280771		Baffle, Drum
54	W10211930		Bulkhead, Front
55	W10346402		Bracket, Valve
56	W10010370		Thermistor, Gas Inlet
57	3391018		Tie Cable
58	W10219013		Housing And Door Assembly
59	W10219016		Door, Lint Screen
60	W10219015		Spring, Lint Screen Door

the laundry company®