Whirlpool WGT3300XQ0 02 - DRYER FRONT PANEL AND DOOR PARTS

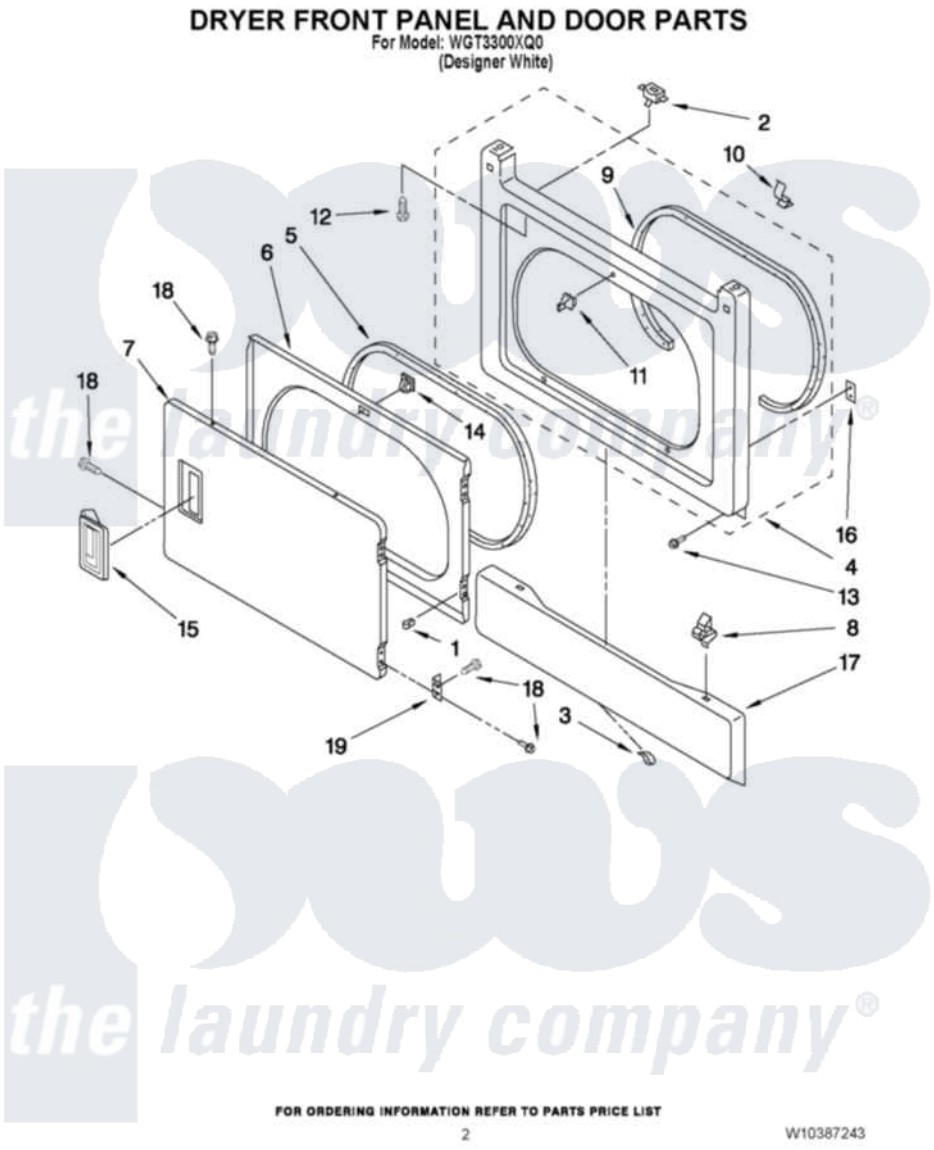

Whirlpool Residential Whirlpool WGT3300XQ0 Washer/Dryer Parts Parts Diagram 02 - DRYER FRONT PANEL AND DOOR PARTS
Click on the part number to view part

Item	Original Part Number	Replaced By	Status	Part Description
1	3389249			Nut, Inner Door
2	3391901	3391902		Switch, Door
3	98234			Clip, U-Bend
4	3392547	279718		Panel
5	3390735			Seal, Door
6	3392563	280083		Door-Rear
7	3387872			Door, Front
8	3388229			Retainer, Toe Panel
9	3387242			Seal, Front Panel
10	3392602	W10134186		Clip, Harness
11	696144	279570		Latch
12	697773	3395530		Screw
13	3393008	308685		Side Trim)
14	3392538	279570		Latch
15	W10095180			Handle, Door
16	3390902			Clip, Door Hinge

17	3388958		Panel, Toe
18	342055	488627	Screw
19	3389247		Hinge And Pin Assembly

the laundry company®

the laundry company®

the laundry company®