Whirlpool WGT3300XQ0 15 - 3402855 BURNER ASSEMBLY

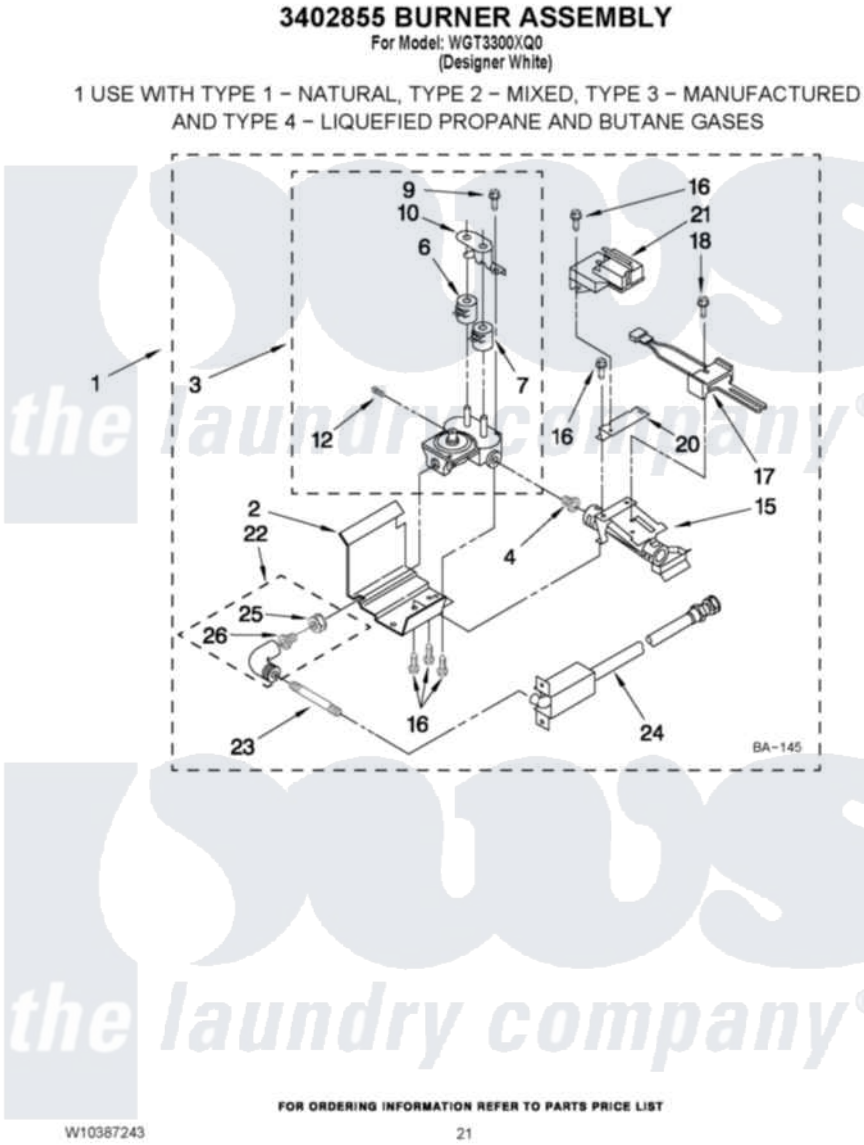

Whirlpool Residential Whirlpool WGT3300XQ0 Washer/Dryer Parts Parts Diagram 15 - 3402855 BURNER ASSEMBLY
Click on the part number to view part

Item	Original Part Number	Replaced By	Status	Part Description
1	3401795	279726		Burner-Gas
2	3391699			Base, Burner
3	3401776	279889		Valve-Assembly
4	3394360		Not Available	ORIFICE, NATURAL GAS
"	15422		Not Available	ORIFICE, BURNER (TYPE 4) (BUTANE)
6	694539			Coil, 60 Hz
7	694540			Coil, 60 Hz
9	694421			Screw, Bracket Mounting
10	694538			Bracket, Shunt
12	239822	W10295523		Plug, Pipe
15	3392268		Not Available	Burner
16	3387057			Screw, 10-16 X 1/2 Orifice, Burner
17	686590	279311		Ignitor
18	3393909			Screw, 8-32 X 7/8
20	697409			Bracket, Sensor

21	338906		Radiant, Sensor
22	3406051		Elbow Union Assembly
23	3391845	W10110398	Pipe, Supply
24	3391118		Supply Line
25	233076		Nut, Compression
26	3393767		Pipe, Tail
NI	3392235	3392235A	LP Gas Con

the laundry company®
the laundry company®
the laundry company®