Whirlpool WTW4950XW3 04 - GEARCASE, MOTOR AND PUMP PARTS

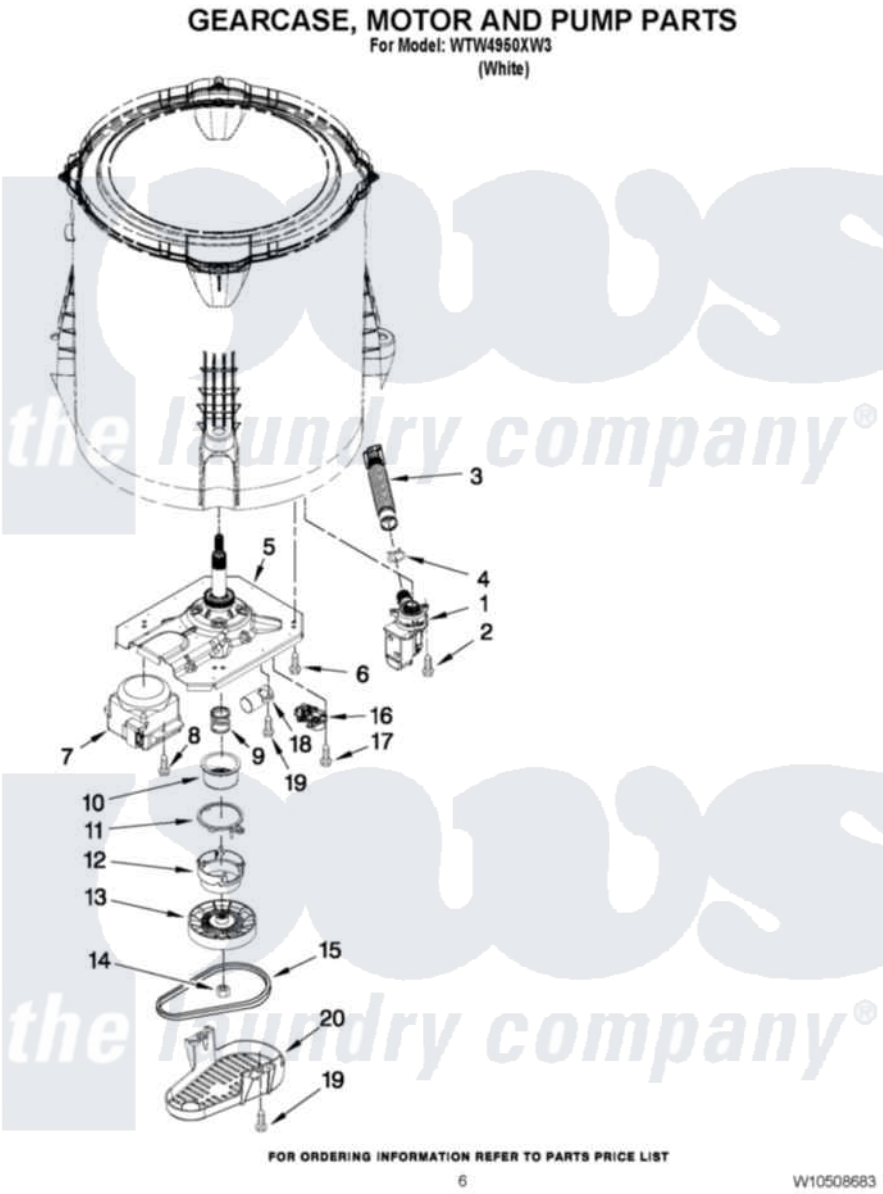

Whirlpool Residential Whirlpool WTW4950XW3 Washer Parts Parts Diagram 04 - GEARCASE, MOTOR AND PUMP PARTS
Click on the part number to view part

Item	Original Part Number	Replaced By	Status	Part Description
1	W10276397			Pump Assembly, Drain
2	W10004910			Screw, 12-16 X 1-1/4
3	W10215091			Hose, Inner Drain Assembly
4	8317496	285655		Clamp, Hose
5	W10469845		Not Available	GEARCASE ASSEMBLY (INCLUDES ITEMS 7, 8, 9, 10 & 13 ON PAGE 5)
6	W10249633			Screw, 7.2-1.6 X 30
7	W10416660			Motor, Drive
8	W10094780	W10182109		Screw-Kit
9	W10006382	W10315818		Cam
10	W10006352	W10315818		Cam
11	W10006353	W10315818		Cam
12	W10006354	W10315818		Cam
13	W10006356			Pulley
14	W10163336			Nut, Pulley

15	W10006384	Belt, Drive
16	W10006355	Actuator, Shift
17	9741052	Screw, 6-32 X 1.00
18	W10390446	Capacitor, Motor Run
19	357640	Screw And Washer
20	W10427633	Shield, Pulley Cover

the laundry company®
the laundry company®
the laundry company®