Whirlpool WTW57ESVH1 05 - MACHINE BASE PARTS

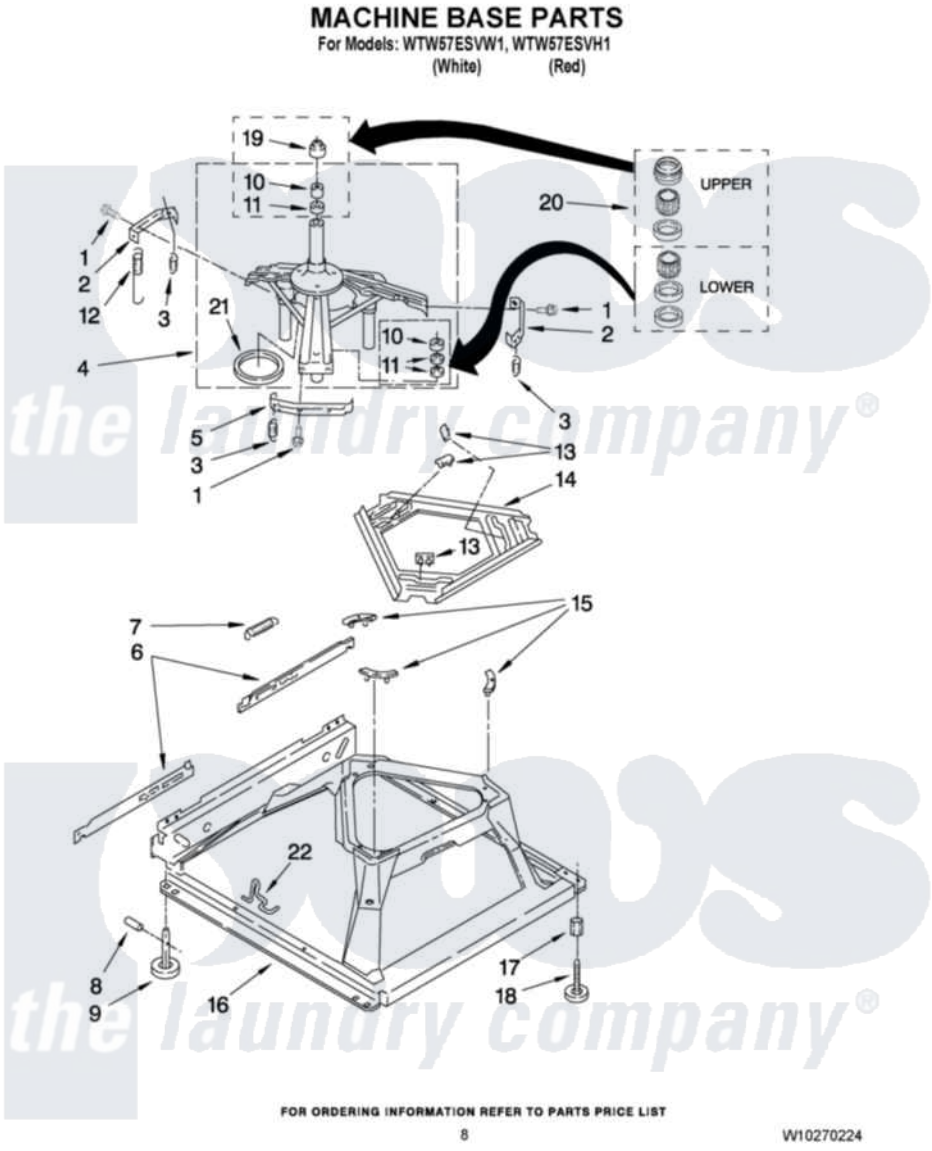

Whirlpool Residential Whirlpool WTW57ESVH1 Washer Parts Parts Diagram 05 - MACHINE BASE PARTS
Click on the part number to view part

Item	Original Part Number	Replaced By	Status	Part Description
1	3400076			Screw, Bracket Mounting
2	64067			Bracket, Spring Outer
3	63907			Spring, Suspension
4	8575214	280184		Support
5	64065			Bracket, Spring Outer
6	63466			Link, Leveling Mechanism
7	62597	8316845		Spring
8	62837			Pin, Knurled
9	62596	285244		Feet-Leveling
10	8546455			Bearing, Centerpost
11	357409	359449		Seal, Agitator Shaft
12	388492	W10250667		Spring, Counterweight
13	62568	285219		Pad
14	3946509			Plate, Suspension
15	3363660	285744		Pad
16	3946512	285771		Base

17	3359452	Nut, Lock
18	W10001130	Foot, Leveling
19	8577376	Seal, Centerpost
20	285203	Centerpost Bearing Kit
21	63134	Ring, Sound Deadening
22	W10145155	Retainer, Suspension Spring

the laundry company®
the laundry company®
the laundry company®