Whirlpool WTW6300SB1 04 - PUMP PARTS, OPTIONAL PARTS (NOT INCLUDED)

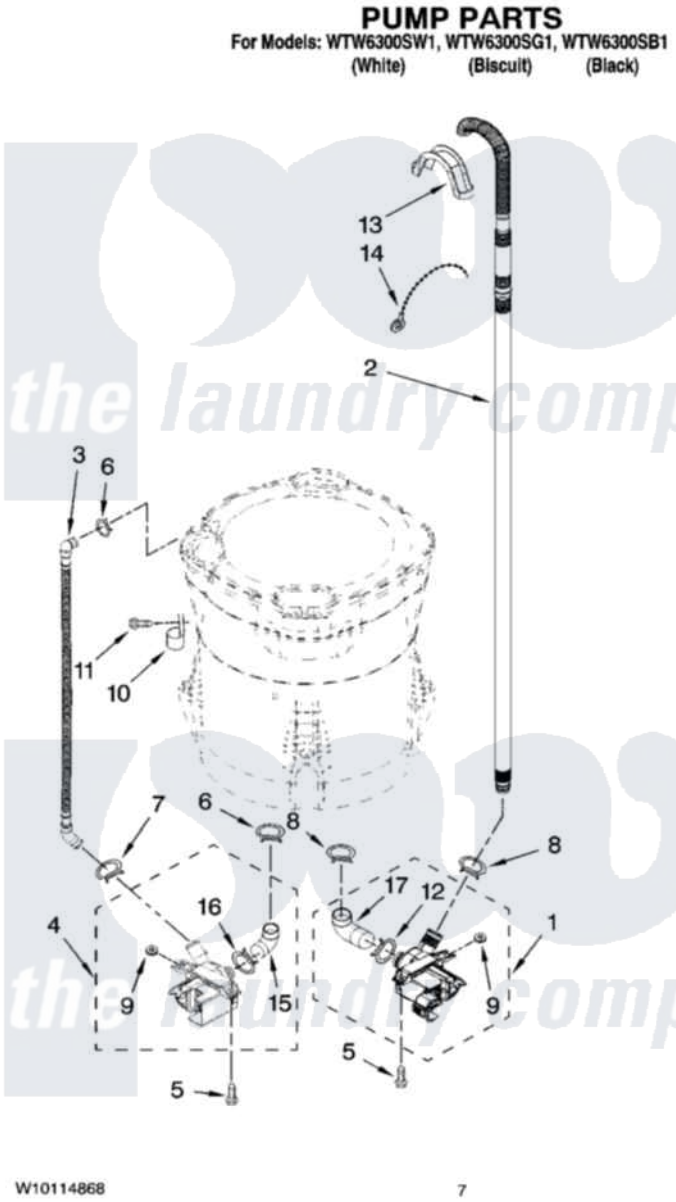

Whirlpool Residential Whirlpool WTW6300SB1 Washer Parts Parts Diagram 04 - PUMP PARTS, OPTIONAL PARTS (NOT INCLUDED)
Click on the part number to view part

Item	Original Part Number	Replaced By	Status	Part Description
1	W10049390	W10217134		Pump-Water
2	8571715	280190		Hose
3	8543774			Hose, Recirc
4	W10049400	W10233462		Pump-Water
5	8534063	W10004910		Screw, 12-16 X 1-1/4
6	370449	285655		Clamp, Hose
7	8269146			Clamp, Hose
8	8317496	285655		Clamp, Hose
9	8182771	280155		Grommet
10	8534021			Clamp, Recirc Hose Retainer
11	8533943	W10109200		Screw, Baffle Mounting
12	8182768	285655		Clamp, Hose
13	8576642			Retainer, Drain Hose
14	3347868	W10339879		Tie, Cable
15	8182769			Hose, Recirc Pump

16	8182770	3367052		Clamp, Hose
17	8182767			Hose, Drain Pump
	72017			Paint, Touch-Up
"	4392899			Paint, Touch-Up
"	72032			Paint, Touch-Up
"	350938			Paint, Pressurized Spray B
"	350930			Paint, Pressurized Spray B
"	4392901			Paint, Pressurized Spray
"	786020		Not Available	PAINT, PRESSURIZED SPRAY (12 oz.) (Black)
"	799344			Paint, Touch-Up)
"	4392900			Paint, Bulk)
"	786032			Refinishing Material
"	BLANK		Not Available	WATER SYSTEM PARTS
"	285442			Water System Parts
"	285321			Water System Parts
"	285320			Water System Parts
"	367031			Water System Parts
"	BLANK		Not Available	SEALER
"	285195			Sealer Sealer, Gasket
"	BLANK		Not Available	COUPLING
"	384496			Coupling, Hose Extension Kit

the laundry company®
the laundry company®