# Whirlpool WTW7800XB0 03 - MOTOR, BASKET AND TUB PARTS

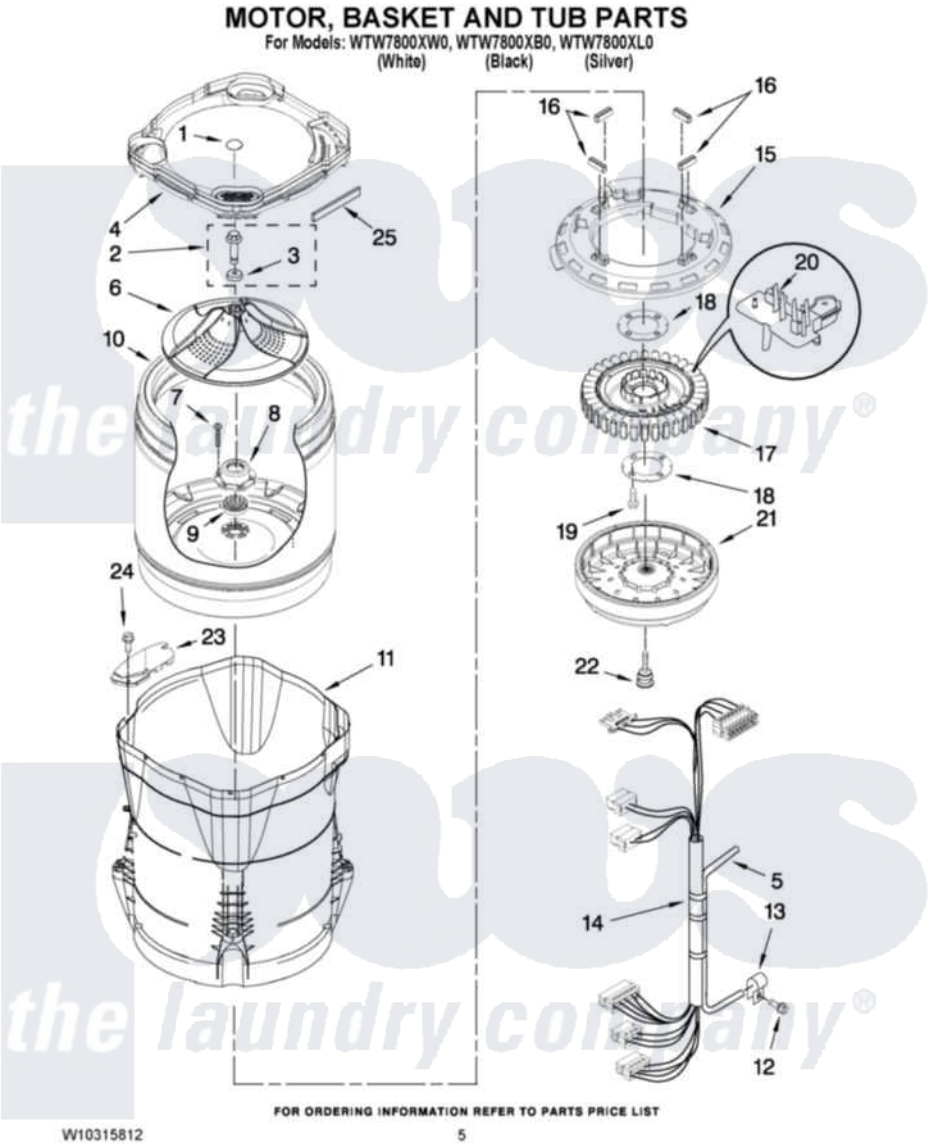


Whirlpool Residential Whirlpool WTW7800XB0 Washer Parts Parts Diagram 03 - MOTOR, BASKET AND TUB PARTS
Click on the part number to view part

| Item | Original Part Number | Replaced By | Status | Part Description |
|---|---|---|---|---|
| 1 | W10305259 | | | Cap, Impeller |
| 2 | W10076270 | | | Screw And Washer Assembly |
| 3 | W10076260 | | | Washer |
| 4 | W10309701 | W10316607 | | Tub Ring |
| 5 | 8572540 | 353244 | | Hose, Pressure Switch |
| 6 | W10286241 | | | Impeller |
| 7 | 8533953 | | | Screw, 8-16 X 1.000 |
| 8 | W10118114 | 280145 | | Hub |
| 9 | 8545953 | 280145 | | Hub |
| 10 | W10310957 | | | Basket Assembly |
| 11 | W10128830 | W10193886 | | Tub-Outer |
| 12 | 8533957 | | | Screw, 10-16 X 1/2 |
| 13 | W10005430 | | | Clamp, Pressure Hose Retainer |
| 14 | W10137697 | | | Harness, Lower |
| 15 | W10137698 | | | Shield, Drive Motor |
| 16 | 8565172 | 280142 | | Tube |

| | | | | |
|---|---|---|---|---|
| 17 | 8565170 | W10419333 | | Stator, Motor |
| 18 | 8557836 | | | Plate, Stator |
| 19 | 8534042 | | | Screw, 1/4-20 X .968 |
| 20 | W10178988 | | | Rps Assembly |
| 21 | 8565177 | 280146 | | Rotor |
| 22 | N/P | | Not Available | BOLT, ROTOR ASSEMBLY NON-SERVICEABLE (SUPPLIED W/ROTOR) |
| 23 | W10222008 | | | Filter, Dual Pump Hood |
| 24 | 8533928 | | | Screw, 8-18 X 3/4 |
| 25 | W10205824 | | | Absorber, Impact |

the laundry company®
the laundry company®
the laundry company®